ANDO TECHNIK
Tel.: 040/8224565-0
www.ando-technik.com

EBARA

SPECIFICATION: DS (Sump Pump)

50 Hz

Rev. E

DS				
PUMP	Liquid Handled	Type of liquid		Dirty water
		Max Temp.	[°C]	40°
		Max solids size	[mm]	5 (50DS) 6 (65DS) 7 (80DS) 8 (100DS)
		Max fibers length	[mm]	50
	Submergence	Max	[m]	3 (1.5 kW) 7 (2.2÷7.5 kW)
		Min	[m]	Refer to low water level (L.W.L.) and usage restriction in dimension
	Construction	Impeller		Semi - open (with strainer)
		Shaft seal type		Oil lubricated, single spring double mechanical seal
	Connection	Suction		Strainer
		Discharge	[inch] [mm]	G1½ UNI ISO 228 (50DS 1.5 kW) DN 50, 65, 80, 100 PN 10 according to EN 1092-2
	Materials	Casing		Cast iron
		Impeller		Cast iron
		Suction Cover		Stainless Steel (1.5 kW) Cast iron (2.2÷7.5 kW)
		Shaft		Aisi 403
		Motor frame		Cast iron
		Fasteners		Aisi 304
		Mechanical seal		SiC/SiC/NBR Impeller side Carbon/Ceramic/NBR Motor side Lubricant: Turbine Oil VG32 (SAE 10W/20W)
	Accessories	Standard		Screwed flange oval type (1.5 kW). Discharge elbow (2.2÷7.5 kW).
		Optional		Quick Discharge Connector (QDC): LS, LM, LL type
	Applicable standard of test			ISO 9906 Annex A
MOTOR	Type			Three Phase air filled dry submersible
	No. of Poles			2
	Rotation speed		[min^{-1}]	~ 2850
	Insulation Class			F
	Protection degree			IP 68
	Power Rating		[kW]	1.5 ÷ 7.5
	Frequency		[Hz]	50 ±1%
	Voltage		[V]	380-415 ±10%
	Starting			DOL
	Over load protection			Built in
	Cable	material		H07RN-F
		length	[m]	6 (up to 1.5 kW), 10 (2.2 kW and above)
	Bearings			Permanently lubricated sealed ball bearings

SPECIFICATION: DVS (Semi-Vortex Pump) 50 Hz

Rev. E

DVS				
PUMP	Liquid Handled	Type of liquid		Water containing foreign matter
		Max Temp.	[°C]	40°
		Max solids size	[mm]	21 (50DVS) 33 (65DVS & 80DVS 1.5 kW) 41 (65DVS & 80DVS 2.2 - 3.7 kW)
		Max fibers length	[mm]	100 (50DVS) 200 (65DVS & 80DVS 1.5 kW) 245 (65DVS & 80DVS 2.2 - 3.7 kW)
	Submergence	Max	[m]	3 (1.5 kW) 7 (2.2 ÷ 3.7 kW)
		Min	[m]	Refer to low water level (L.W.L.) and usage restriction in dimension
	Construction	Impeller		Semi – Vortex
		Shaft seal type		Oil lubricated, single spring double mechanical seal
	Connection	Suction		Open
		Discharge	[inch] [mm]	G1½ UNI ISO 228 (50DVS 1.5 kW) DN 50, 65, 80 PN 10 according to EN 1092-2
	Materials	Casing		Cast iron
		Impeller		Cast iron
		Shaft		Aisi 403
		Motor frame		Cast iron
		Fasteners		Aisi 304
		Mechanical seal		SiC/SiC/NBR Impeller side Carbon/Ceramic/NBR Motor side Lubricant: Turbine Oil VG32 (SAE 10W/20W)
	Accessories	Standard		Screwed companion oval flange (50 DVS) Discharge elbow (65DVS & 80DVS)
		Optional		Quick Discharge Connector (QDC): LS, LM, type
	Applicable standard of test			ISO 9906 Annex A
MOTOR	Type			Three Phase air filled dry submersible
	No. of Poles			2
	Rotation speed		[min^{-1}]	~ 2850
	Insulation Class			F
	Protection degree			IP 68
	Power Rating		[kW]	1.5 ÷ 3.7
	Frequency		[Hz]	50±1%
	Voltage		[V]	380-415 ±10%
	Starting			DOL
	Over load protection			Built in
	Cable	material		H07RN-F
		length	[m]	6 (up to 1.5 kW), 10 (2.2 kW and above)
	Bearings			Permanently lubricated sealed ball bearings

SPECIFICATION: DL (Sewage Pump)

50 Hz

Rev. E

DL					
PUMP	Liquid Handled	Type of liquid		Sewage	
		Max Temp.	[°C]	40°	
		Max solids size	[mm]	35 (65DL) 50 (80DL, all DLC) 60 (100DL, 100DLB) 70 (150DL up to 22kW)	76 (200DL up to 22kW) 76 (all 30÷44 kW) 82 (250DL up to 22kW) 90 (300DL up to 22kW)
		Max fibers length	[mm]	195 (65DL) 240 (80DL, all DLC) 300 (100DL, 100DLB) 400 (150DL up to 22kW)	500 (200DL up to 22kW) 500 (all 30÷44 kW) 550 (250DL up to 22kW) 600 (300DL up to 22kW)
	Submergence	Max	[m]	7	
		Min	[m]	Refer to low water level (L.W.L.) and usage restriction in dimension	
	Construction	Impeller		Non clog, semi-open	
		Shaft seal type		Oil lubricated, single (up to 3.7 kW) or tandem (5.5 kW and above) springs double mechanical seal	
	Connection	Suction		Open	
		Discharge	[mm]	Flange DN 65, 80, 100, 150, 200, 250, 300 PN 10 according to EN 1092-2	
	Materials	Casing		Cast iron	
		Impeller		Cast iron	
		Suction Cover		Cast iron	
		Shaft		Aisi 403	
		Motor frame		Cast iron	
		Fasteners		Aisi 304	
		Mechanical seal		SiC/SiC/NBR Impeller side Carbon/Ceramic/NBR Motor side Lubricant: Turbine Oil VG32 (SAE 10W/20W)	
	Accessories	Standard		Discharge elbow	
		Optional		Quick Discharge Connector (QDC): LM, LL type	
	Applicable standard of test			ISO 9906 Annex A	
MOTOR	Type			Three Phase air filled dry submersible	
	No. of Poles			4	
	Rotation speed		[min^{-1}]	~ 1450	
	Insulation Class			F	
	Protection degree			IP 68	
	Power Rating		[kW]	1.5 ÷ 45	
	Frequency		[Hz]	50±1%	
	Voltage		[V]	380-415 ±10%(1.5÷7.5 kW) 400-415 ±10% (Δ connection 11÷22 kW) 380-415 ±10%(Δ connection 30÷45 kW)	
	Starting			DOL up to 7.5 kW Y/Δ from 11 kW up to 45 kW	
	Over load protection			Built in	
	Cable	material		H07RN-F	
		length	[m]	10	
	Bearings			Permanently lubricated sealed ball bearings	

SPECIFICATION: DLW/C (Sewage Pump)

50 Hz

Rev. E

DLW/C				
PUMP	Liquid Handled	Type of liquid		Sewage
		Max Temp.	[°C]	40°
		Max solids size	[mm]	35 (65DLW/C) 50 (80DLW/C) 60 (100DLB W/C)
		Max fibers length	[mm]	195 (65DLW/C) 240 (80DLW/C) 300 (100DLW/C)
	Submergence	Max	[m]	7
		Min	[m]	Refer to low water level (L.W.L.) and usage restriction in dimension
	Construction	Impeller		Non clog, semi-open with cutting action
		Shaft seal type		Oil lubricated, single (up to 3.7 kW) or tandem (5.5 kW and above) springs double mechanical seal
	Connection	Suction		Open
		Discharge	[mm]	Flange DN 65, 80, 100 PN 10 according to EN 1092-2
	Materials	Casing		Cast iron
		Impeller		Cast iron
		Suction Cover		Cast iron
		Shaft		Aisi 403
		Motor frame		Cast iron
		Fasteners		Aisi 304
		Mechanical seal		SiC/SiC/NBR Impeller side Carbon/Ceramic/NBR Motor side Lubricant: Turbine Oil VG32 (SAE 10W/20W)
	Accessories	Standard		Discharge elbow
		Optional		Quick Discharge Connector (QDC): LM, LL type
	Applicable standard of test			ISO 9906 Annex A
MOTOR	Type			Three Phase air filled dry submersible
	No. of Poles			4
	Rotation speed		[min^{-1}]	~ 1450
	Insulation Class			F
	Protection degree			IP 68
	Power Rating		[kW]	1.5 ÷ 7.5
	Frequency		[Hz]	50±1%
	Voltage		[V]	380-415 ±10%
	Starting			DOL (Direct on line)
	Over load protection			Built in
	Cable	material		H07RN-F
		length	[m]	10
	Bearings			Permanently lubricated sealed ball bearings

SPECIFICATION: DML (Sewage Pump)

50 Hz

Rev. E

DML				
PUMP	Liquid Handled	Type of liquid		Sewage
		Max Temp.	[°C]	40°
		Max solids size	[mm]	76
		Max fibers length	[mm]	500
	Submergence	Max	[m]	7
		Min	[m]	Refer to low water level (L.W.L.) and usage restriction in dimension
	Construction	Impeller		Non clog, single channel
		Shaft seal type		Oil lubricated, single spring double mechanical seal
	Connection	Suction		Open
		Discharge	[mm]	Flange DN 80, 100, 150 PN 10 according to EN 1092-2
	Materials	Casing		Cast iron
		Impeller		Cast iron
		Suction Cover		Cast iron
		Shaft		Aisi 403
		Motor frame		Cast iron
		Fasteners		Aisi 304
		Mechanical seal		SiC/SiC/NBR Impeller side Carbon/Ceramic/NBR Motor side Lubricant: Turbine Oil VG32 (SAE 10W/20W)
	Accessories	Standard		Discharge elbow
		Optional		Quick Discharge Connector (QDC): LM, LL type
	Applicable standard of test			ISO 9906 Annex A
MOTOR	Type			Three Phase air filled dry submersible
	No. of Poles			4
	Rotation speed		[min^{-1}]	~ 1450
	Insulation Class			F
	Protection degree			IP 68
	Power Rating		[kW]	2.2 ÷ 22
	Frequency		[Hz]	50±1%
	Voltage		[V]	380-415 -10+6% (2.2 kW) 380-415 ±10% (3.7÷22 kW))
	Starting			DOL 2.2 kW Y/Δ from 3.7 kW up to 22 kW
	Over load protection			Built in motor protector 2.2 kW Built in heat probe from 3.7 kW up to 22 kW
	Cable	material		H07RN-F
		length	[m]	10
	Bearings			Permanently lubricated sealed ball bearings

SPECIFICATION: DMLV (Sewage Pump) 50 Hz

Rev. E

DMLV				
PUMP	Liquid Handled	Type of liquid		Sewage
		Max Temp.	[°C]	40°
		Max solids size	[mm]	80 (80DMLV) 100 (100DMLV)
		Max fibers length	[mm]	400 (80DMLV) 500 (100DMLV)
	Submergence	Max	[m]	7
		Min	[m]	Refer to low water level (L.W.L.) and usage restriction in dimension
	Construction	Impeller		Vorterx
		Shaft seal type		Oil lubricated, single spring double mechanical seal
	Connection	Suction		Open
		Discharge	[mm]	Flange DN 80, 100 PN 10 according to EN 1092-2
	Materials	Casing		Cast iron
		Impeller		Cast iron
		Suction Cover		Cast iron
		Shaft		Aisi 403
		Motor frame		Cast iron
		Fasteners		Aisi 304
		Mechanical seal		SiC/SiC/NBR Impeller side Carbon/Ceramic/NBR Motor side Lubricant: Turbine Oil VG32 (SAE 10W/20W)
	Accessories	Standard		Discharge elbow
		Optional		Quick Discharge Connector (QDC): LM, LL type
	Applicable standard of test			ISO 9906 Annex A
MOTOR	Type			Three Phase air filled dry submersible
	No. of Poles			4
	Rotation speed		[min^{-1}]	~ 1450
	Insulation Class			F
	Protection degree			IP 68
	Power Rating		[kW]	2.2 ÷ 22
	Frequency		[Hz]	50±1%
	Voltage		[V]	380-415 -10+6% (2.2 kW) 380-415 ±10% (3.7÷22 kW))
	Starting			DOL 2.2 kW Y/Δ from 3.7 kW up to 22 kW
	Over load protection			Built in motor protector 2.2 kW Built in heat probe from 3.7 kW up to 22 kW
	Cable	material		H07RN-F
		length	[m]	10
	Bearings			Permanently lubricated sealed ball bearings

SELECTION CHART

50 Hz

Rev. E

DS-DSF

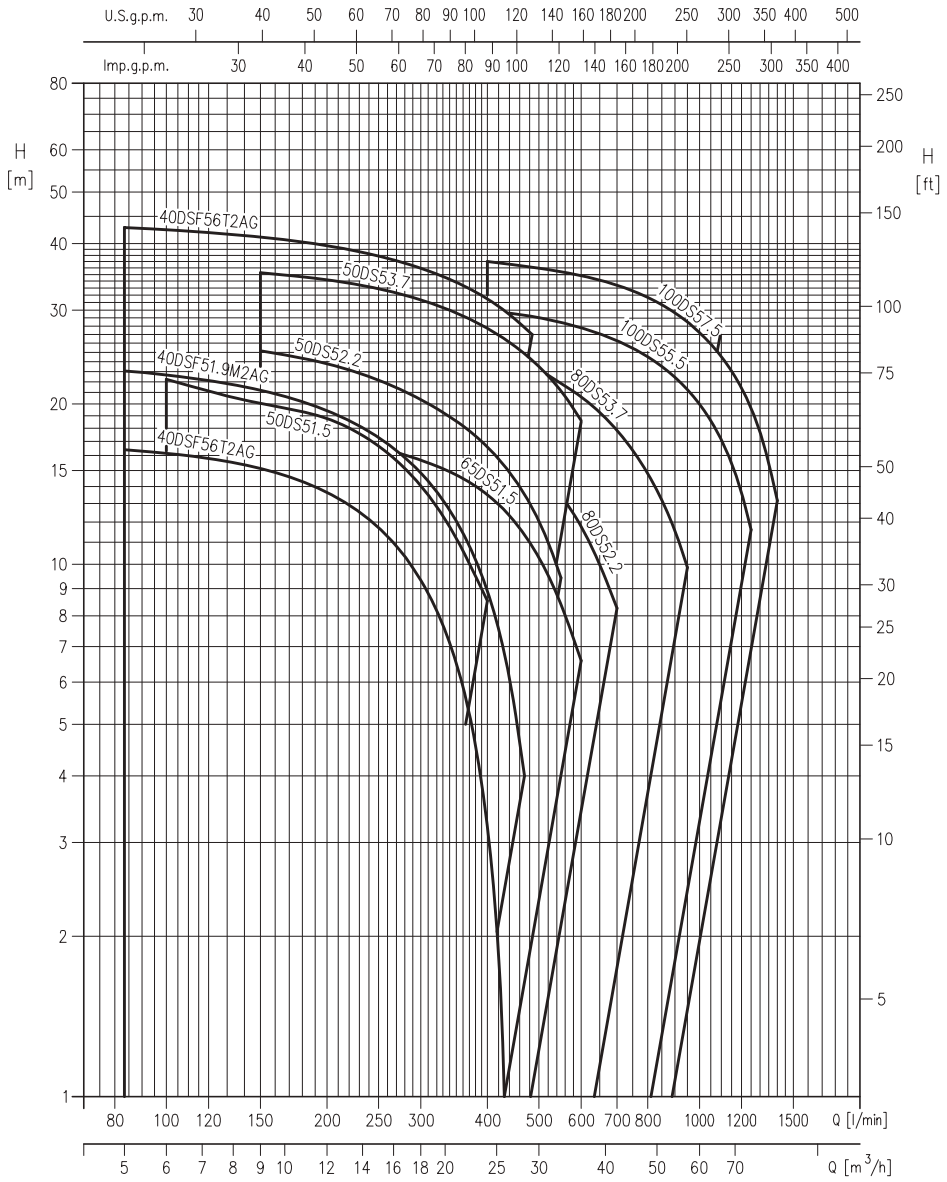

Pump Type	Power [kW]	Power [HP]	Q=Capacity l/min	0	83	100	150	200	250	300	400	433	450	467	473	483	500	550	580	600	700	800	950	1000	1170	1200	1250	1400
			m³/h	0	5	6	9	12	15	18	24	26	27	28	28.4	29	30	33	34.8	36	42	48	57	60	70.2	72	75	84
			H=Total manometric head in meters																									
40DSF51.5M2CG	1.5	2		16.9	16.4	16.2	15.1	13.6	11.7	9.3	3.2	0.8	-	-	-	-	-	-	-	-	-	-	-	-	-	-	-	-
40DSF51.9M2AG	1.9	2.5		24.6	23.1	22.7	21.2	19.4	17.3	14.8	8.9	6.6	5.4	4.2	-	-	-	-	-	-	-	-	-	-	-	-	-	-
40DSF56T2AG	6	8		45	43	42.5	41	39.6	37.9	36	31.5	30	28.9	28	27.7	27.1	-	-	-	-	-	-	-	-	-	-	-	-
50DS51.5	1.5	2		24	-	22.3	20.7	18.8	16.5	14	8.5	-	-	-	-	-	-	-	-	-	-	-	-	-	-	-	-	-
50DS52.2	2.2	3		27	-	-	25.2	23.7	22.1	20.4	16.6	15.2	14.4	13.6	13.3	12.9	12	9.4	-	-	-	-	-	-	-	-	-	-
50DS53.7	3.7	5		37.4	-	-	35.3	34.2	32.9	31.4	27.7	26.4	25.7	25.0	24.6	24.2	23.5	21.1	19.5	18.6	-	-	-	-	-	-	-	-
65DS51.5	1.5	2		18	-	-	17.5	17.1	16.5	15.7	13.5	12.5	12	11	11.2	10.9	10.3	8.5	7.3	6.6	-	-	-	-	-	-	-	-
80DS52.2	2.2	3		22	-	-	-	20.8	20.2	19.4	17.6	16.8	16.4	15.9	15.8	15.5	15	13.4	12.5	11.8	8.3	-	-	-	-	-	-	-
80DS53.7	3.7	5		27.5	-	-	-	-	26.3	25.8	24.6	24.0	23.7	23.5	23.3	23.1	22.8	21.8	21.2	20.6	17.8	14.8	9.9	-	-	-	-	-
100DS55.5	5.5	7.5		31.6	-	-	-	-	-	30.7	30	30	29.5	29.4	29.3	29.2	29	28.4	28	27.8	26.3	24.5	21.3	20.0	14.8	13.6	11.6	-
100DS57.5	7.5	10		39.2	-	-	-	-	-	-	37	37	36.6	36.4	36.3	36.2	36	35.5	35.1	34.8	33.4	31.7	28.5	27.3	22.5	21.4	19.7	13.2

SELECTION CHART

50 Hz

Rev. E

DVS

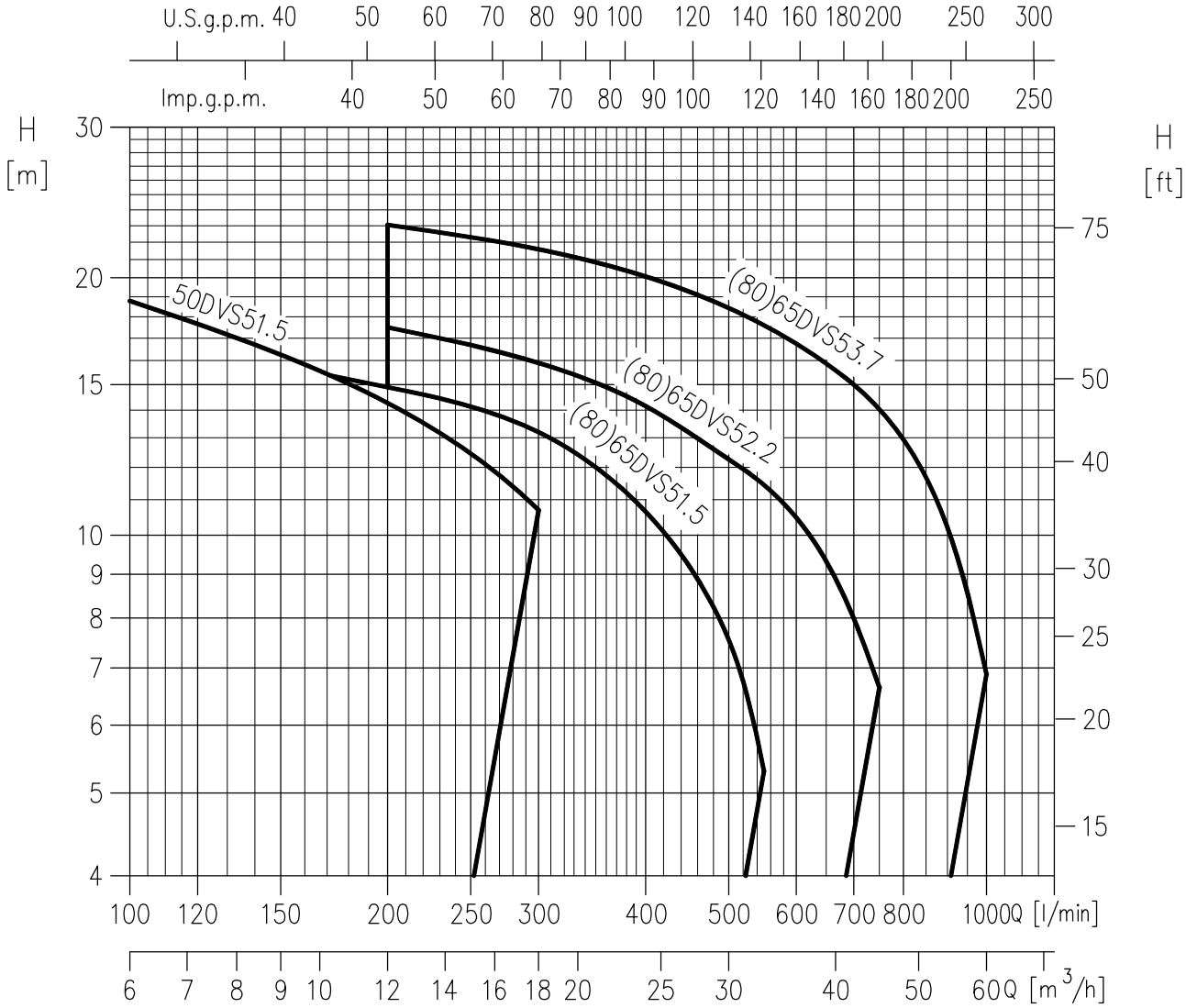

Pump Type	Power		Q=Capacity												
			l/min 0	100	150	200	300	400	500	550	600	700	750	900	1000
	[kW]	[HP]	m³/h 0	6	9	12	18	24	30	33	36	42	45	54	60
			H=Total manometric head in meters												
50DVS51.5	1.5	2	22.0	18.8	16.6	14.3	10.7	-	-	-	-	-	-	-	-
(80)65DVS51.5	1.5	2	18.6	-	15.8	14.9	13.2	10.9	7.6	5.3	-	-	-	-	-
(80)65DVS52.2	2.2	3	20.3	-	-	17.5	15.9	14.2	12.3	11.5	10.5	8.1	6.6	-	-
(80)65DVS53.7	3.7	5	25.7	-	-	23.0	21.6	20.1	18.4	17.6	16.7	15.0	14.0	10.4	6.9

SELECTION CHART

50 Hz

Rev. E

65DL, 80DL

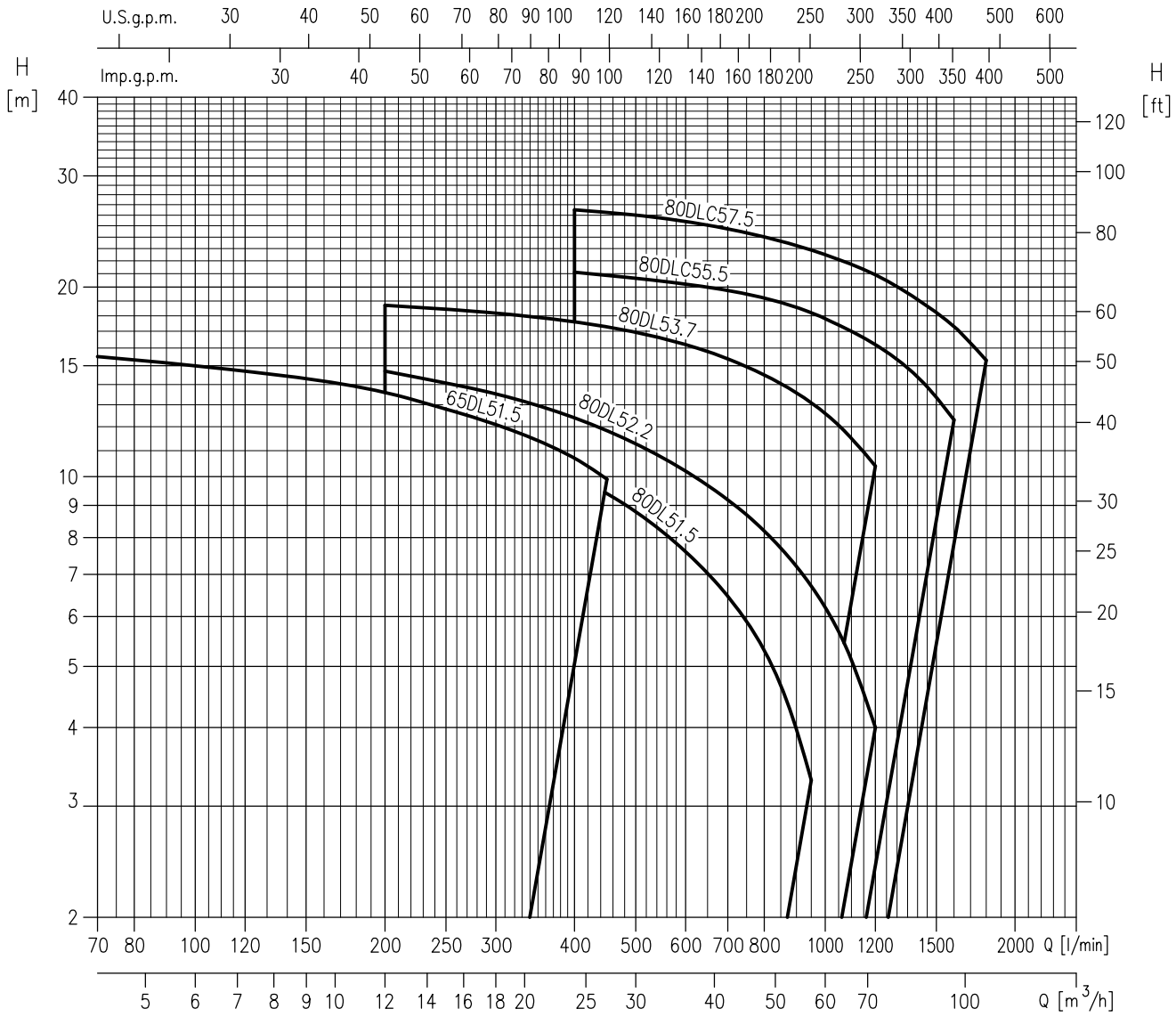

Pump Type	Power		Q=Capacity													
			l/min	0	70	150	200	400	450	600	800	950	1000	1200	1400	1600	1800
	[kW]	[HP]	m³/h	0	4	9	12	24	27	36	48	57	60	72	84	96	108
			H=Total manometric head in meters														
65DL51.5	1.5	2		16.4	15.5	14.3	13.6	10.7	9.9	-	-	-	-	-	-	-	-
80DL51.5	1.5	2		14.0	-	-	12.2	10.0	9.4	7.6	5.3	3.3	-	-	-	-	-
80DL52.2	2.2	3		17.1	-	-	14.7	12.4	11.8	10.2	8.2	6.7	6.2	4.0	-	-	-
80DL53.7	3.7	5		19.4	-	-	18.7	17.6	17.3	16.2	14.5	13.1	12.6	10.4	-	-	-
80DLC55.5	5.5	7.5		22.2	-	-	-	21.1	20.9	20.2	19.2	18.2	17.8	16.2	14.4	12.3	-
80DLC57.5	7.5	10		28.0	-	-	-	26.5	26.3	25.4	24.0	22.9	22.5	20.9	19.1	17.3	15.3

SELECTION CHART

50 Hz

Rev. E

100DL

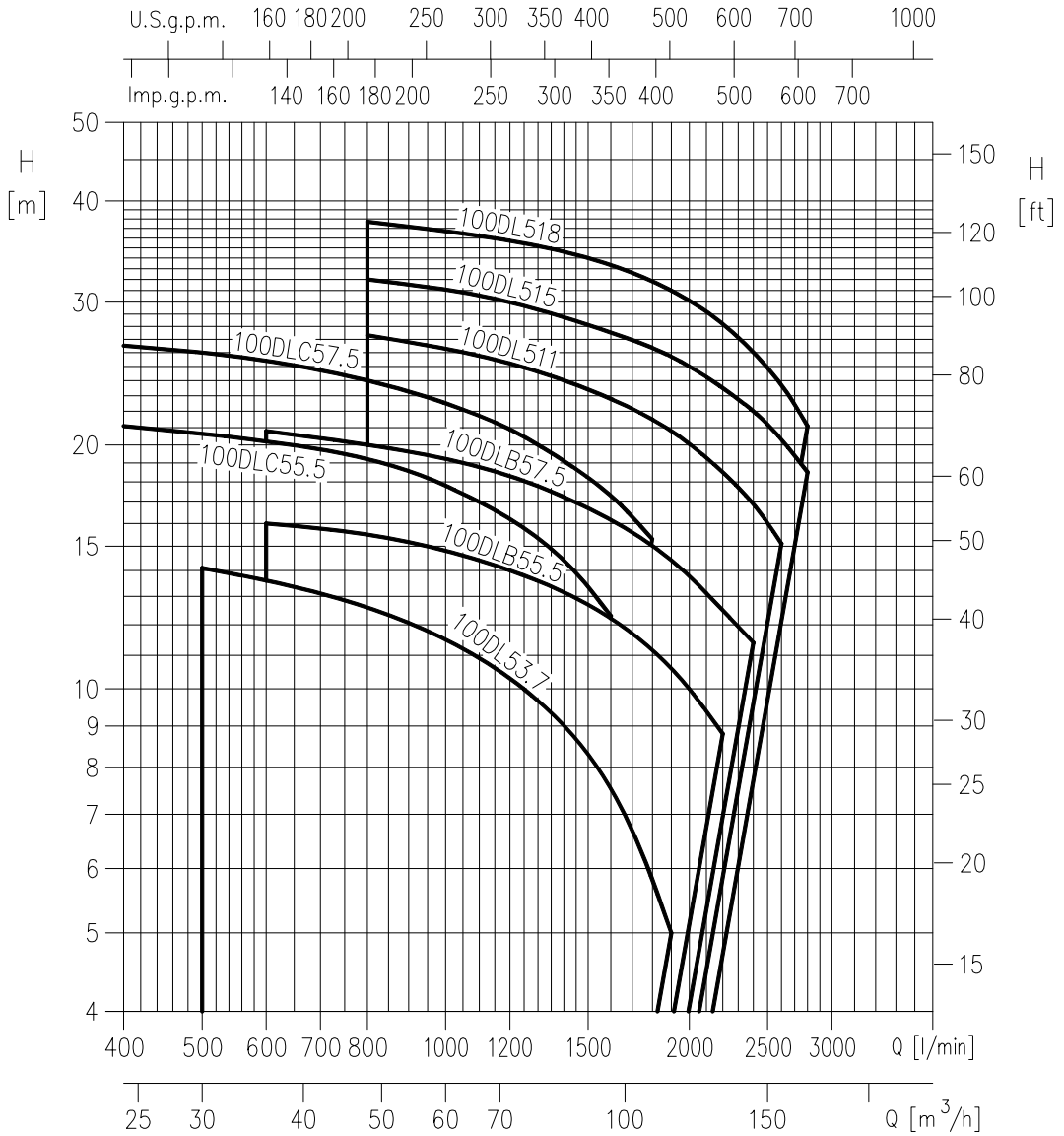

Pump Type	Power		Q=Capacity													
			l/min 0	400	500	600	800	1200	1500	1600	1800	1900	2200	2400	2600	2800
	[kW]	[HP]	m³/h 0	24	30	36	48	72	90	96	108	114	132	144	156	168
			H=Total manometric head in meters													
100DLC55.5	5.5	7.5	22.2	21.1	20.7	20.2	19.2	16.2	13.3	12.3	-	-	-	-	-	-
100DLC57.5	7.5	10	28.0	26.5	25.9	25.4	24.0	20.9	18.3	17.3	15.3	-	-	-	-	-
100DL53.7	3.7	5	16.0	-	14.1	13.6	12.6	10.3	8.3	7.5	5.9	5.0	-	-	-	-
100DLB55.5	5.5	7.5	17.0	-	-	16.0	15.5	14.0	12.7	12.2	11.1	10.6	8.8	-	-	-
100DLB57.5	7.5	10	22.5	-	-	20.8	20.0	18.3	16.7	16.1	15.1	15.0	12.5	11.4	-	-
100DL511	11	15	30.4	-	-	-	27.3	25.2	23.4	22.8	21.5	20.8	18.5	16.9	15.1	-
100DL515	15	20	33.9	-	-	-	32.0	30.0	28.1	27.6	26.4	25.7	23.5	22.0	20.3	18.5
100DL518.5	18.5	25	41.0	-	-	-	37.7	35.7	34.0	33.4	31.9	31.0	28.2	26.0	23.7	21.1

SELECTION CHART

50 Hz

Rev. E

150DL

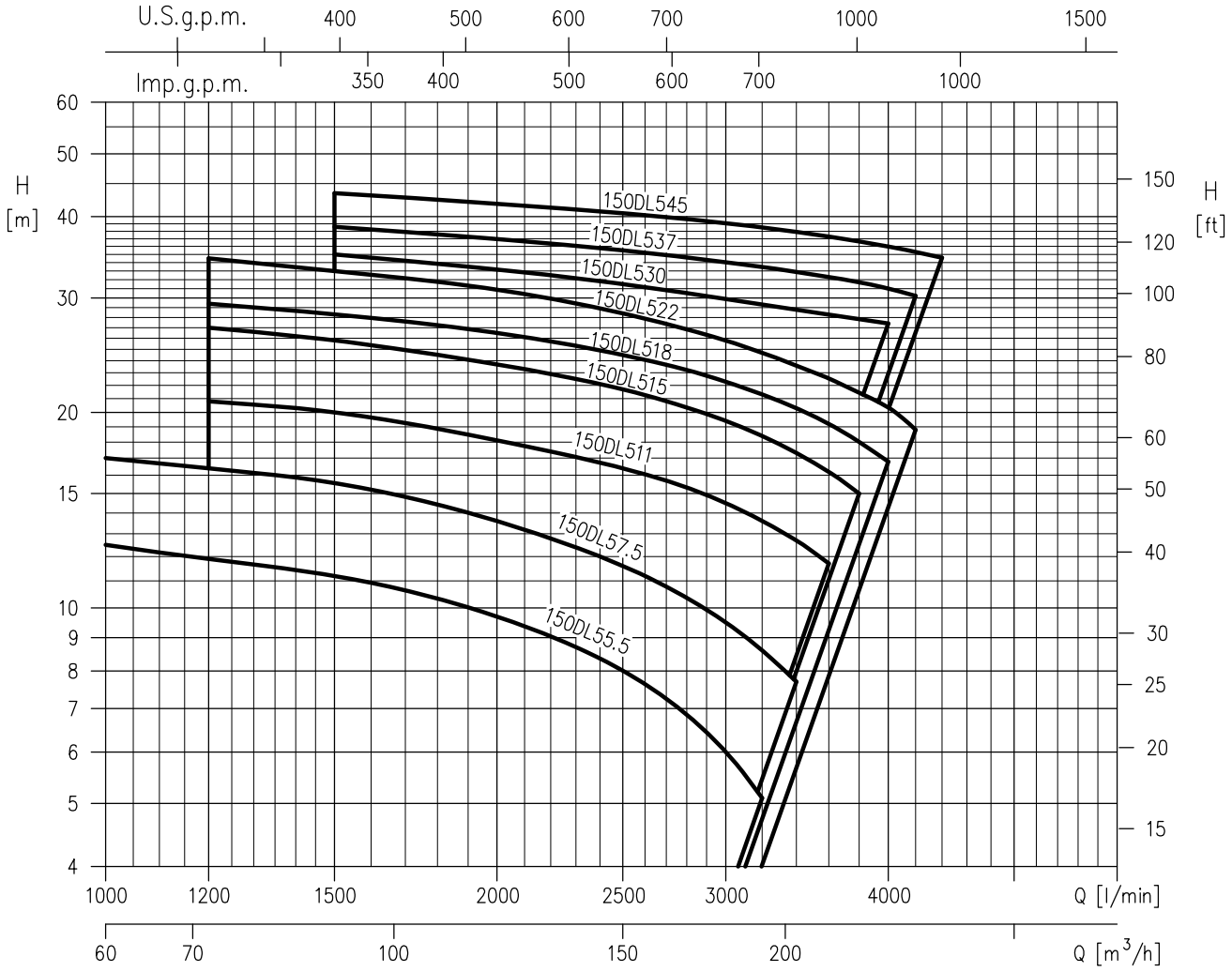

Pump Type	Power [kW]	Power [HP]	Q=Capacity l/min 0	1000	1200	1500	2000	2500	3000	3200	3400	3500	3600	3800	4000	4200	4400
			m³/h 0	60	72	90	120	150	180	192	204	210	216	228	240	252	264
			H=Total manometric head in meters														
150DL55.5	5.5	7.5	15.8	12.5	11.9	11.2	9.7	8.0	6.0	5.1	-	-	-	-	-	-	-
150DL57.5	7.5	10	19.6	17.0	16.4	15.2	13.6	11.6	9.5	8.6	7.7	-	-	-	-	-	-
150DL511	11	15	24.7	-	20.8	20.0	18.1	16.4	14.5	13.6	12.7	12.2	11.7	-	-	-	-
150DL515	15	20	31.4	-	27.0	25.8	23.7	21.7	19.4	18.4	17.3	16.8	16.2	15.0	-	-	-
150DL518.5	18.5	25	32.5	-	29.4	28.3	26.5	24.5	22.3	21.3	20.3	19.8	19.2	18.0	16.8	-	-
150DL522	22	30	38.7	-	34.5	33.0	30.9	28.4	25.8	24.7	23.6	23.0	22.4	21.2	20.5	18.8	-
150DL530	30	40	39.0	-	-	35.0	33.2	31.5	29.9	29.3	28.8	28.5	28.3	27.8	27.4	-	-
150DL537	37	50	43.0	-	-	38.6	37.0	35.5	34.1	33.5	32.9	32.6	32.3	31.7	31.0	30.2	-
150DL545	45	60	48.0	-	-	43.5	42.0	40.5	39.1	38.5	37.9	37.6	37.3	36.7	36.0	35.3	34.6

SELECTION CHART

50 Hz

Rev. E

200DL

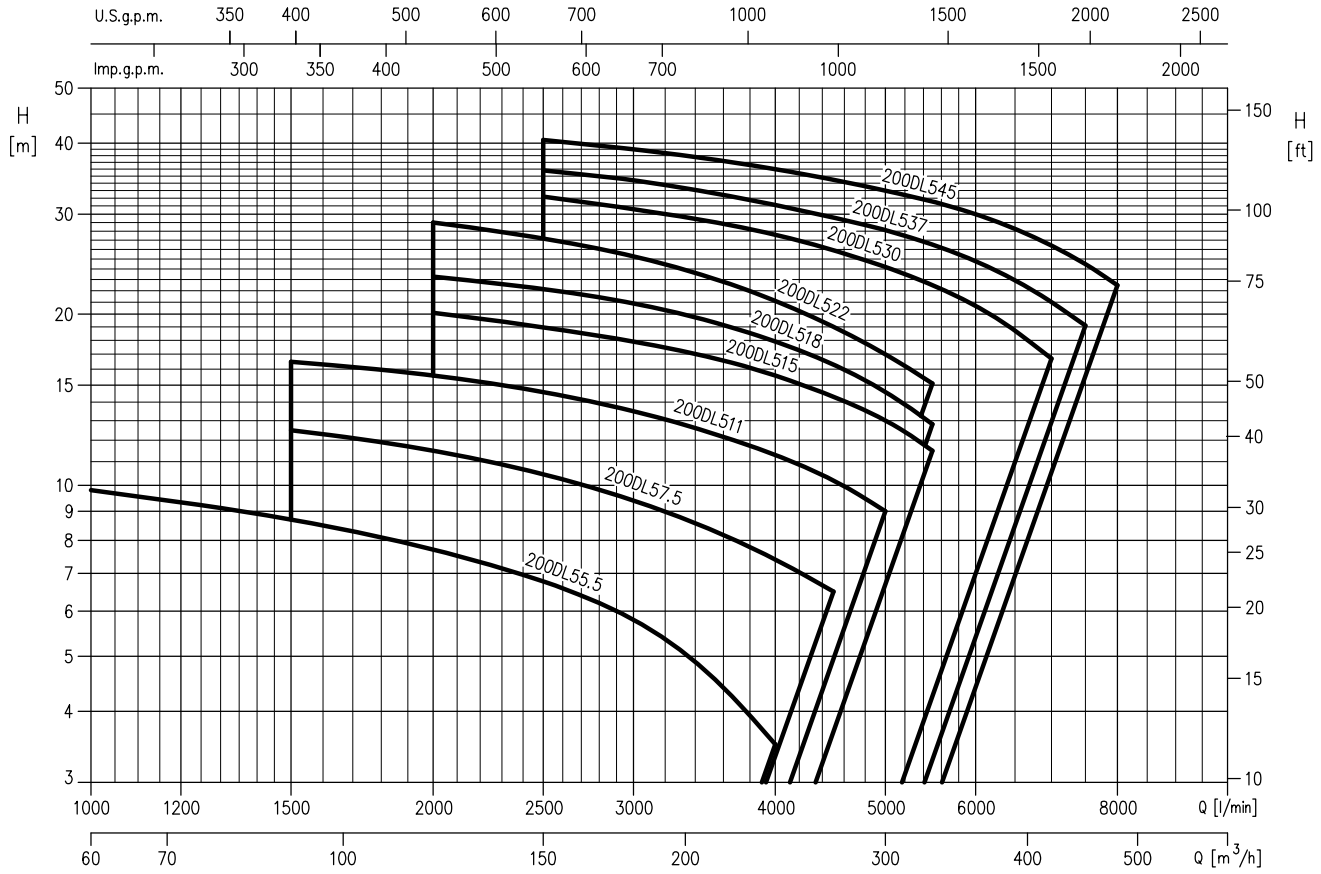

Pump Type	Power		Q=Capacity													
			l/min 0	1000	1500	2000	2500	3000	4000	4500	5000	5500	6000	7000	7500	8000
	[kW]	[HP]	m³/h 0	60	90	120	150	180	240	270	300	330	360	420	450	480
			H=Total manometric head in meters													
200DL55.5	5.5	7.5	12.0	9.8	8.7	7.7	6.8	5.8	3.5	-	-	-	-	-	-	-
200DL57.5	7.5	10	15.5	-	12.5	11.5	10.5	9.4	7.4	6.5	-	-	-	-	-	-
200DL511	11	15	19.7	-	16.5	15.6	14.6	13.5	11.3	10.2	9.0	-	-	-	-	-
200DL515	15	20	23.9	-	-	20.1	19.0	17.9	15.6	14.3	13.0	11.5	-	-	-	-
200DL518.5	18.5	25	26.5	-	-	23.3	22.2	20.9	17.9	16.3	14.6	12.8	-	-	-	-
200DL522	22	30	34.9	-	-	29.0	27.2	25.3	21.1	19.0	17.0	15.1	-	-	-	-
200DL530	30	40	39.7	-	-	-	32.2	30.6	27.6	25.9	24.2	22.5	20.7	16.7	-	-
200DL537	37	50	43.0	-	-	-	35.8	34.4	31.1	29.6	28.1	26.5	24.8	21.0	19.1	-
200DL545	45	60	48.0	-	-	-	40.5	39.0	36.0	34.5	33.0	31.5	30.0	26.4	24.5	22.5

SELECTION CHART

50 Hz

Rev. E

250DL

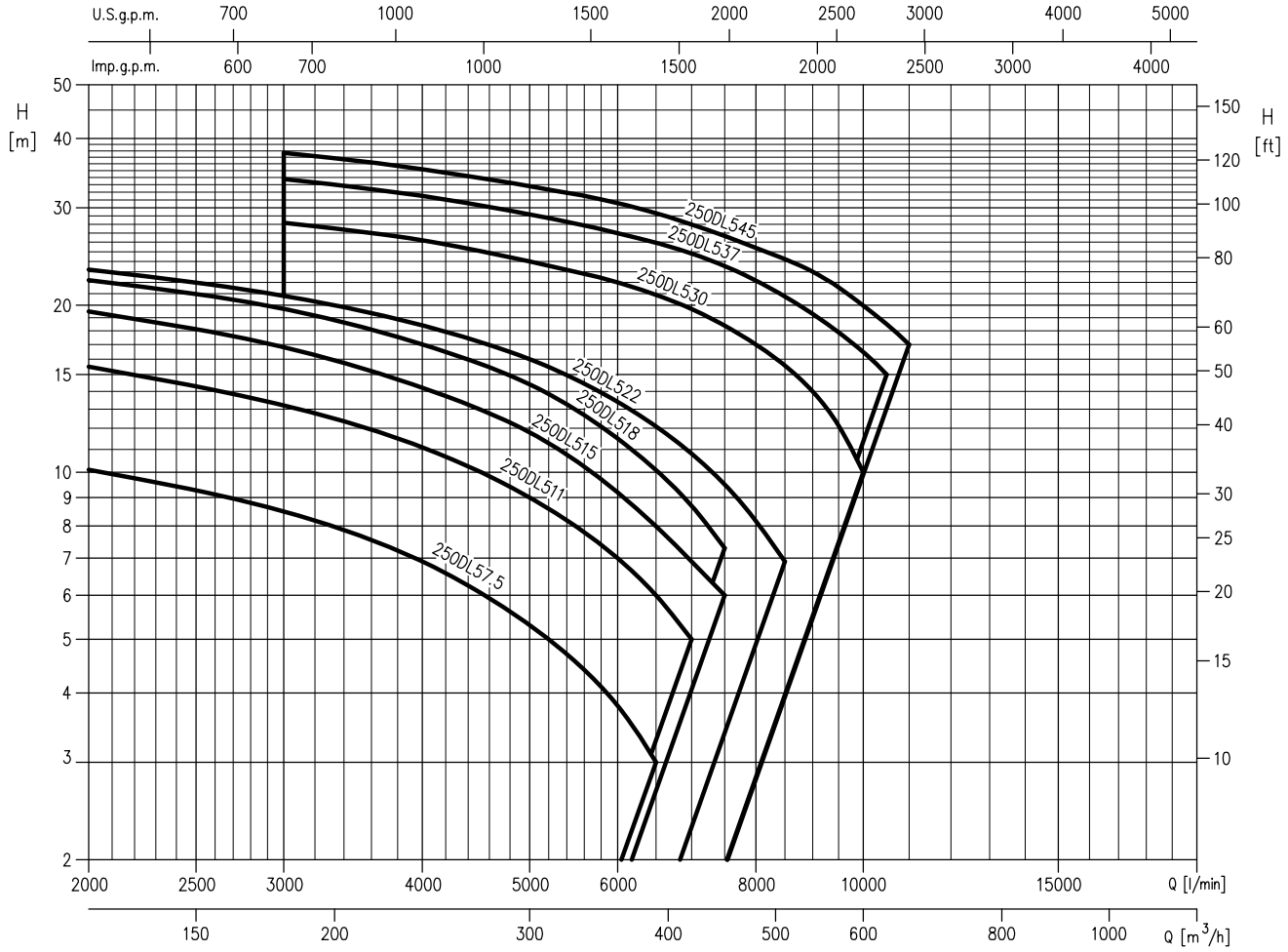

Pump Type	Power [kW]	Power [HP]	Q=Capacity l/min 0	2000	3000	4000	5000	6000	6500	7000	7500	8000	8500	9000	10000	10500	11000
			m³/h 0	120	180	240	300	360	390	420	450	480	510	540	600	630	660
			H=Total manometric head in meters														
250DL57.5	7.5	10	13.6	10.1	8.5	6.9	5.3	3.8	3.0	-	-	-	-	-	-	-	-
250DL511	11	15	20.2	15.5	13.2	11.1	9.0	7.0	6.0	5.0	-	-	-	-	-	-	-
250DL515	15	20	25.2	19.5	16.8	14.2	11.8	9.2	8.0	6.9	6.0	-	-	-	-	-	-
250DL518.5	18.5	25	27.0	22.2	19.7	17.0	14.4	11.5	10.1	8.7	7.3	-	-	-	-	-	-
250DL522	22	30	27.8	23.2	20.8	18.4	16.0	13.4	12.1	10.8	9.5	8.2	6.9	-	-	-	-
250DL530	30	40	36.0	-	28.2	26.2	24.0	22.0	20.9	19.7	18.4	17.0	15.6	14.0	10.0	-	-
250DL537	37	50	40.0	-	33.8	31.5	29.2	27.0	25.9	24.8	23.5	22.2	20.8	19.3	16.5	15.0	-
250DL545	45	60	45.0	-	37.7	35.2	32.8	30.6	29.3	28.0	26.7	25.4	24.2	23.0	20.0	18.5	17.0

SELECTION CHART

50 Hz

Rev. E

300DL

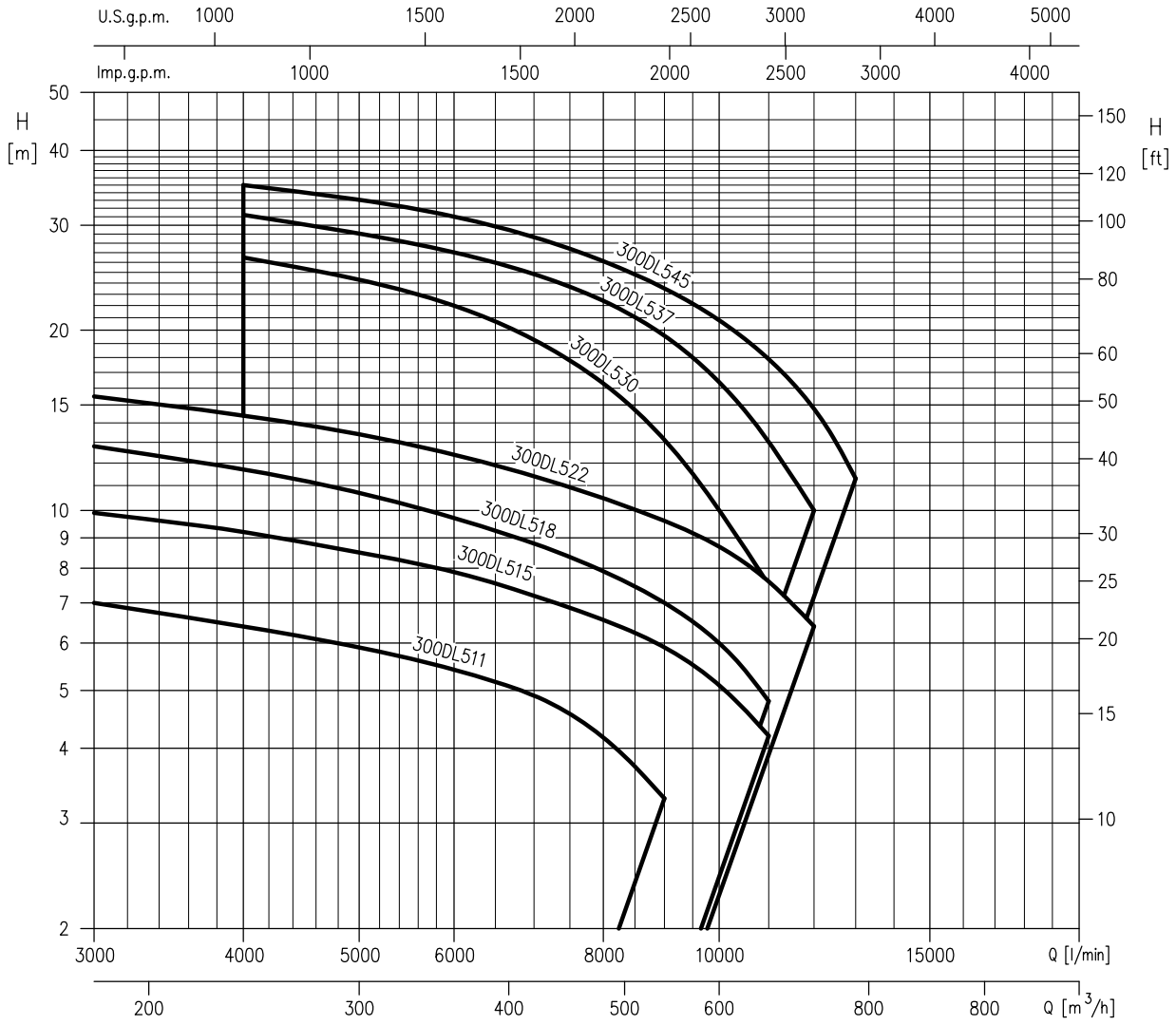

Pump Type	Power		Q=Capacity											
			l/min 0	3000	4000	5000	6000	7000	8000	9000	10000	11000	12000	13000
	[kW]	[HP]	m³/h 0	180	240	300	360	420	480	540	600	660	720	780
			H=Total manometric head in meters											
300DL511	11	15	9.2	7.0	6.4	5.9	5.5	4.9	4.2	3.3	-	-	-	-
300DL515	15	20	12.2	9.9	9.2	8.5	8.0	7.2	6.6	5.9	5.1	4.2	-	-
300DL518.5	18.5	25	16.6	12.8	11.7	10.7	9.7	8.8	7.9	7.0	6.0	4.8	-	-
300DL522	22	30	19.0	15.5	14.4	13.4	12.4	11.4	10.5	9.6	8.7	7.6	6.4	-
300DL530	30	40	36.0	-	26.5	24.4	22.0	19.3	16.3	13.1	10.0	7.5	-	-
300DL537	37	50	40.0	-	31.2	29.2	27.0	24.8	22.4	19.6	16.4	13.0	10.0	-
300DL545	45	60	45.0	-	35.0	33.1	31.0	28.6	26.1	23.5	20.8	17.9	14.8	11.3

SELECTION CHART

50 Hz

Rev. E

DL W/C

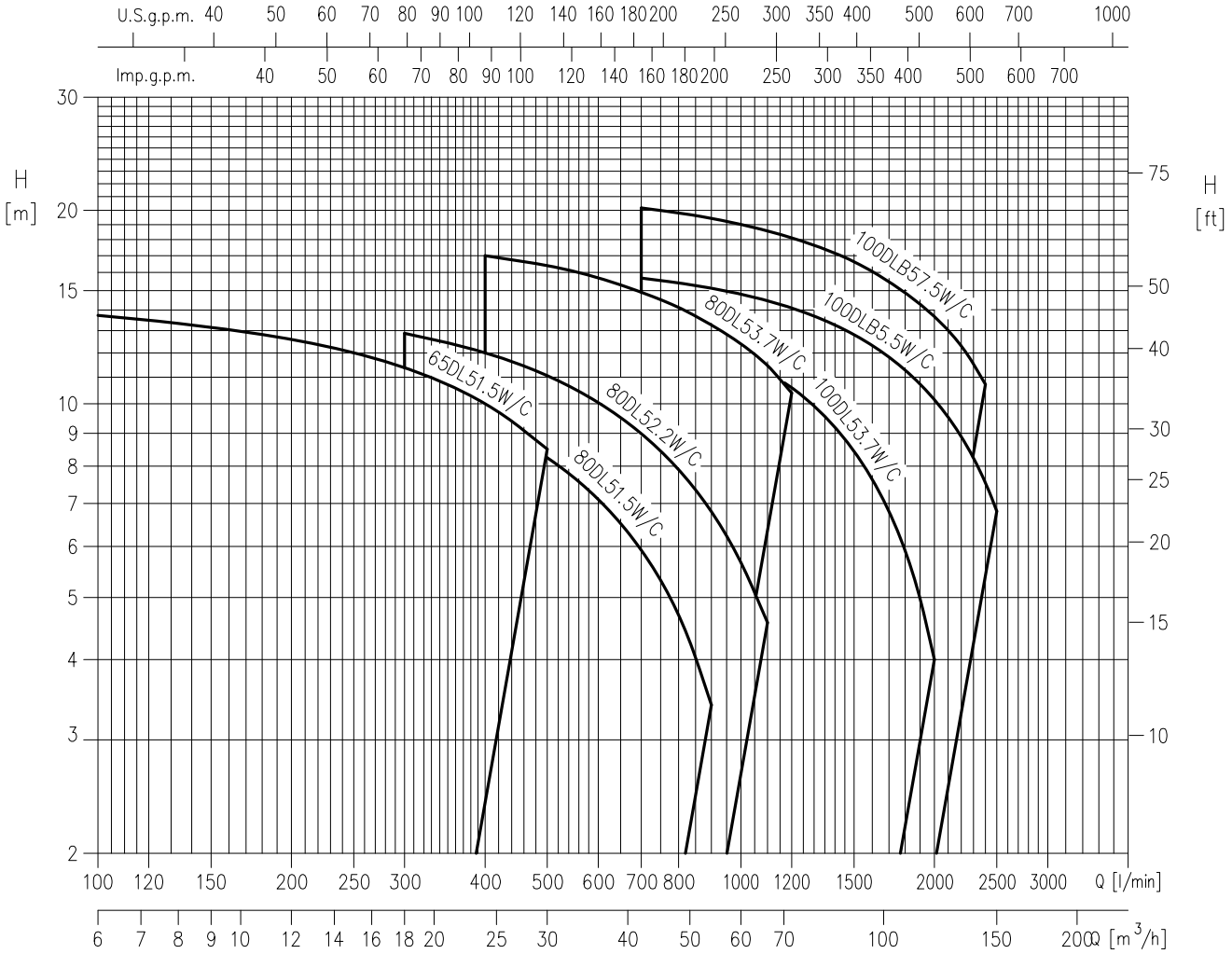

Pump Type	Power		Q=Capacity															
			l/min	0	100	250	300	400	500	700	900	1000	1100	1200	1400	1600	2000	2400	2500
	[kW]	[HP]	m³/h	0	6	15	18	24	30	42	54	60	66	72	84	96	120	144	150
			H=Total manometric head in meters																
65DL51.5W/C	1.5	2		14.8	13.7	12.0	11.4	10.0	8.5	-	-	-	-	-	-	-	-	-	-
80DL51.5W/C	1.5	2		12.7	-	10.7	10.3	9.3	8.2	5.9	3.4		-	-	-	-	-	-	-
80DL52.2W/C	2.2	3		15.2	-	-	12.9	12.0	11.1	9.0	6.8	5.7	4.6	-	-	-	-	-	-
80DL53.7W/C	3.7	5		18.5	-	-	-	17.0	16.4	14.9	13.4	12.6	11.6	10.4	-	-	-	-	-
100DL53.7W/C	3.7	5		16.1	-	-	-	-	14.1	13.1	12.2	11.7	11.2	10.6	9.2	7.6	4.0	-	-
100DLB55.5W/C	5.5	7.5		16.9	-	-	-	-	-	15.7	15.1	14.8	14.5	14.1	13.3	12.3	10.1	7.5	6.8
100DLB57.5W/C	7.5	10		22.5	-	-	-	-	-	20.2	19.4	19.0	18.6	18.1	17.2	16.1	13.7	10.7	-

SELECTION CHART

50 Hz

Rev. E

80DML

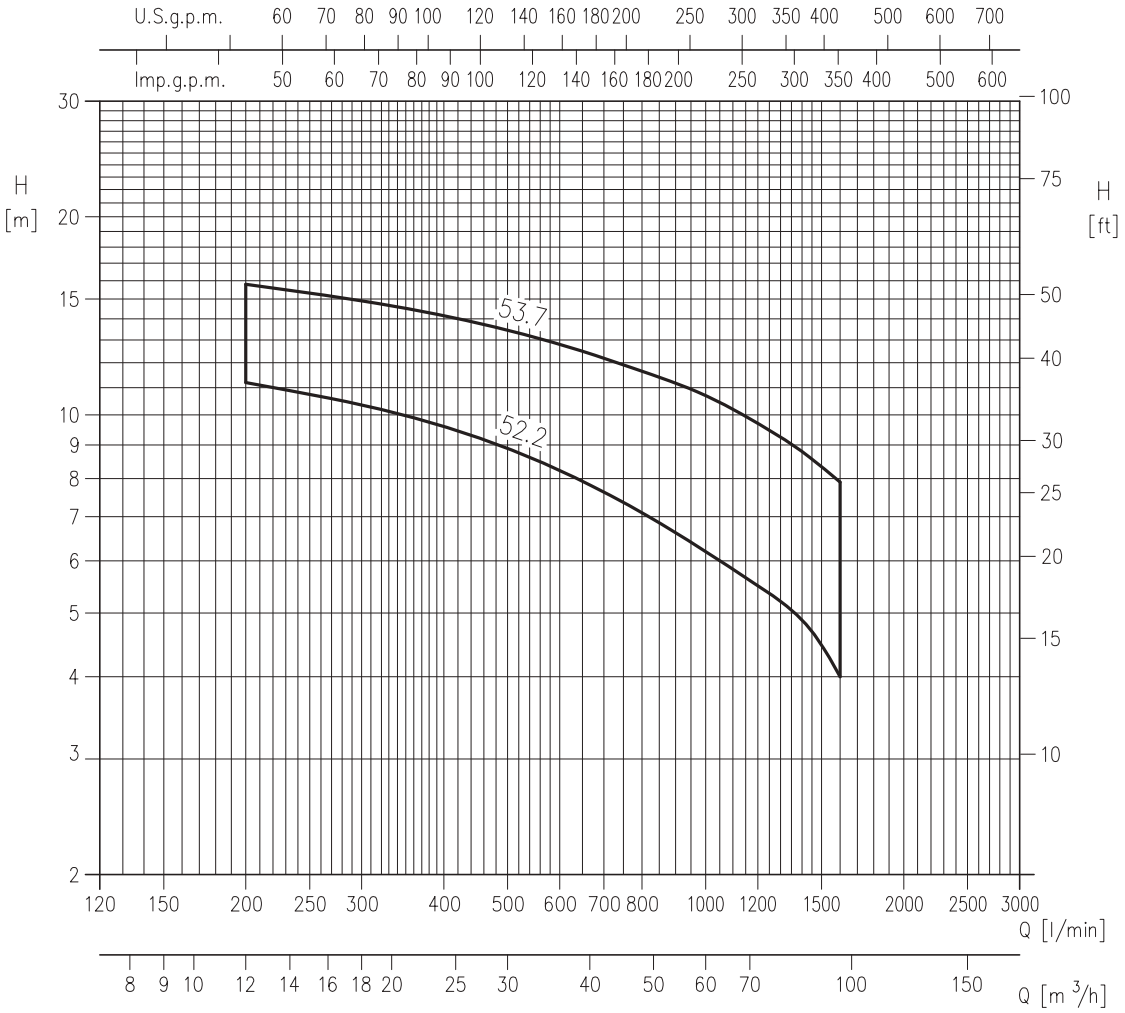

Pump Type	Pow er [kW]	[HP]	Q= Capacity [l/min] 0	200	400	600	800	1000	1200	1400	1600
			[m³/h] 0	12	24	36	48	60	72	84	96
			H=Total manometric head in meters								
80DML52.2	2.2	3	13.1	11.2	9.6	8.2	7.1	6.2	5.5	4.9	4
80DML53.7	3.7	5	17.9	15.8	14.2	12.8	11.7	10.7	9.7	8.8	7.9

SELECTION CHART

50 Hz

Rev. E

100DML

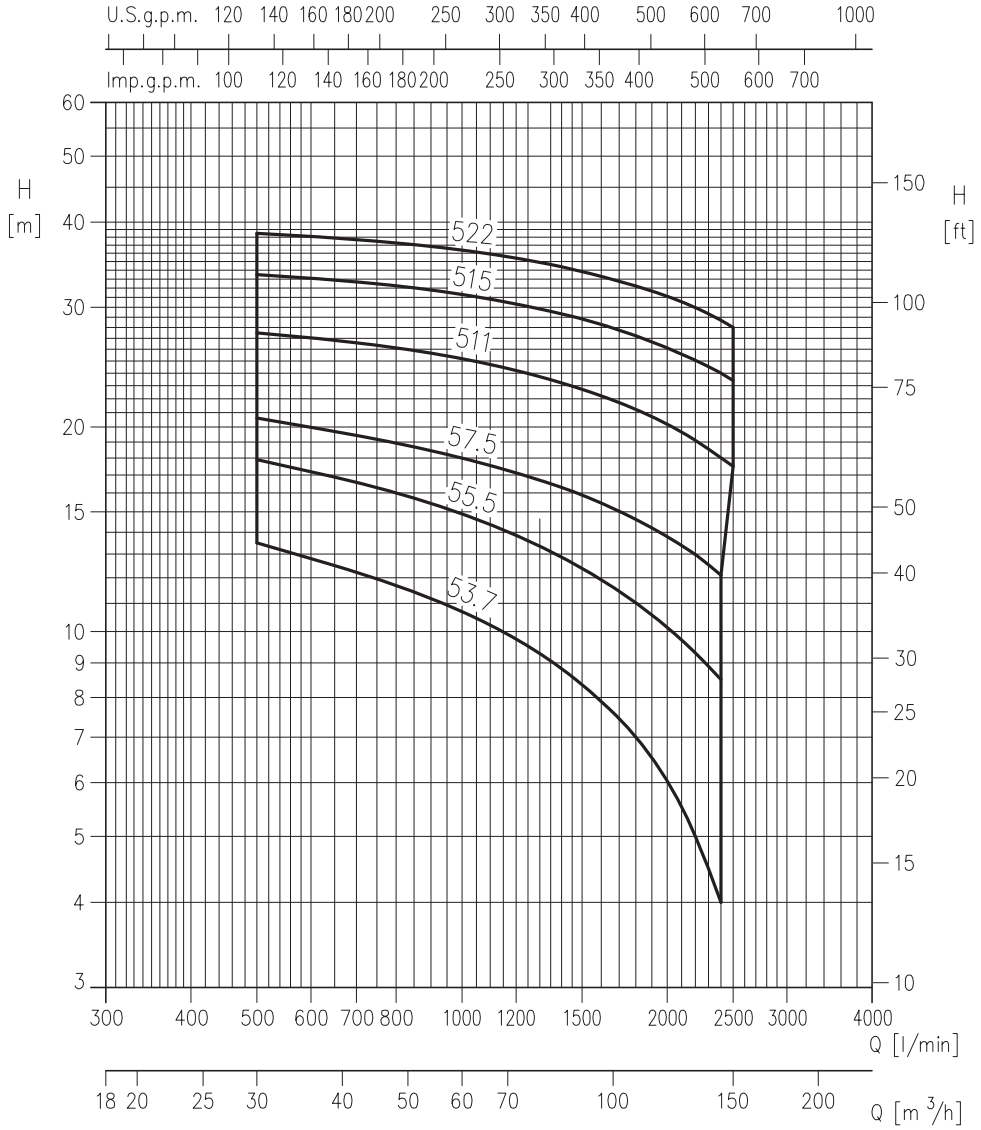

Pump Type	Power [kW]	Power [HP]	Q= Capacity [l/min] 0	500	1000	1300	1600	1900	2200	2400	2500
			[m³/h] 0	30	60	78	96	114	132	144	150
			H=Total manometric head in meters								
100DML53.7	3.7	5	17.9	13.5	10.7	9.3	7.9	6.5	5.0	4.0	-
100DML55.5	5.5	7.5	22.0	17.9	14.9	13.4	11.9	10.6	9.3	8.5	-
100DML57.5	7.5	10	25.3	20.6	18.0	16.7	15.5	14.2	13.0	12.1	-
100DML511	11	15	30.3	27.5	25.2	23.7	22.2	20.7	19.1	18.0	17.5
100DML515	15	20	35.0	33.5	31.3	29.8	28.3	26.7	25.1	24.0	23.4
100DML522	22	30	40.0	38.5	36.4	34.9	33.3	31.7	30.0	28.7	28.0

SELECTION CHART

50 Hz

Rev. E

150DML

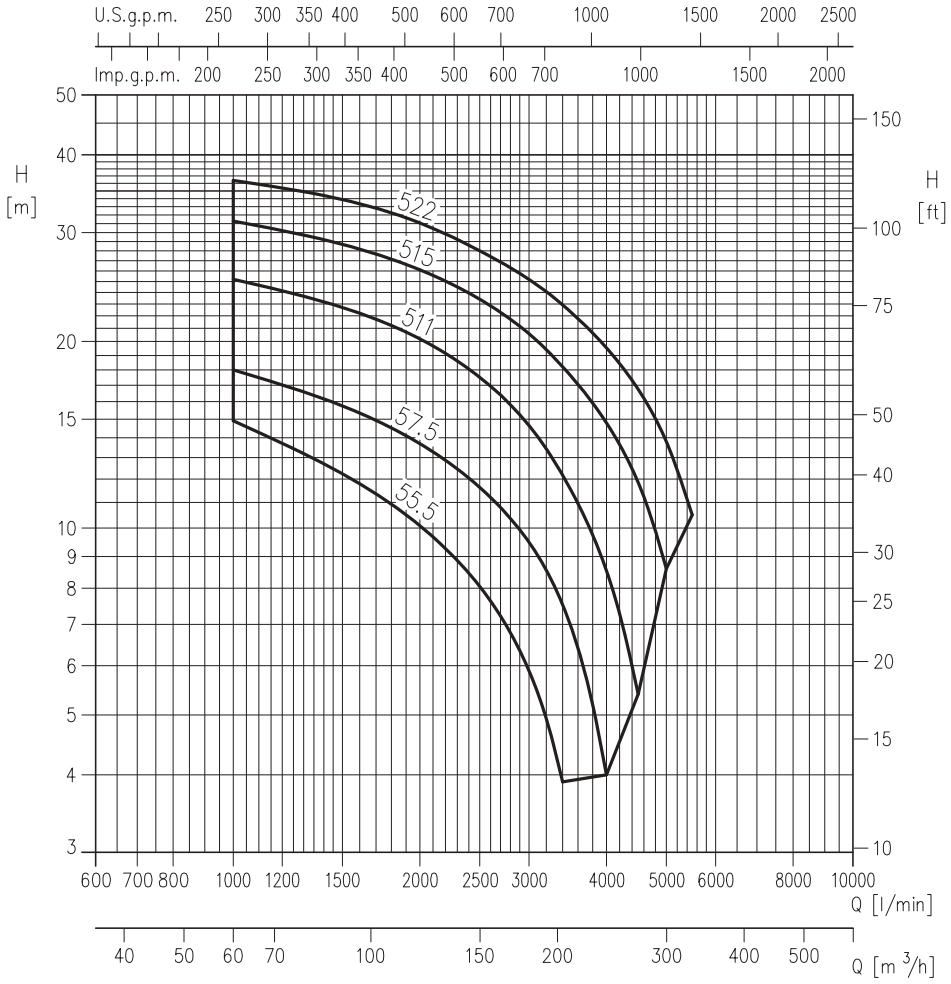

Pump Type	Power		Q= Capacity									
			[l/min] 0	1000	2000	2500	3000	3400	4000	4500	5000	5500
	[kW]	[HP]	[m3/h] 0	60	120	150	180	204	240	270	300	330
			H=Total manometric head in meters									
150DML55.5	5.5	7.5	22.0	14.9	10.1	8.0	5.9	3.9	-	-	-	-
150DML57.5	7.5	10	25.3	18.0	13.7	11.6	9.5	7.5	4.0	-	-	-
150DML511	11	15	30.3	25.2	20.2	17.5	14.7	12.2	8.6	5.4	-	-
150DML515	15	20	35.0	31.3	26.1	23.4	20.6	18.2	14.8	11.9	8.6	-
150DML522	22	30	40.0	36.4	31.1	28.0	25.2	22.9	19.5	16.8	13.8	10.5

SELECTION CHART

50 Hz

Rev. E

100 DMLV - 100DMLVF

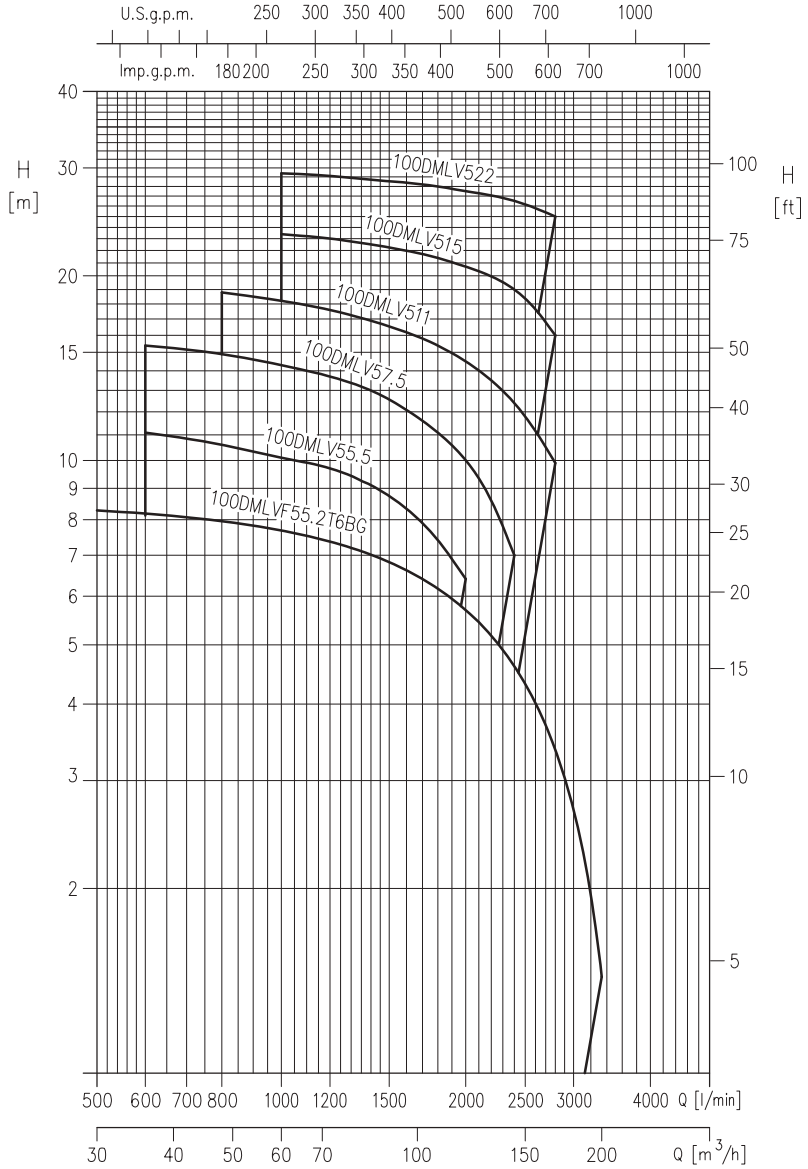

Pump Type	Power [kW]	Power [HP]	Q=Capacity l/min	0	500	600	800	1000	1200	1700	2000	2400	2800	3333
			m³/h	0	30	36	48	60	72	102	120	144	168	200
			H=Total manometric head in meters											
100DMLVF55.2T6BG	5.2	7		8.6	8.3	8.2	8	7.7	7.4	6.4	5.7	4.6	3.4	1.4
100DMLV5,5	5.5	7.5		13.2	-	11.1	10.6	10.1	9.7	7.9	6.4	-	-	-
100DMLV57,5	7.5	10		16.8	-	15.4	14.9	14.3	13.7	11.6	10	7	-	-
100DMLV511	11	15		20.6	-	-	18.8	18.2	17.6	15.8	14.5	12.4	9.9	-
100DMLV515	15	20		24.9	-	-	-	23.4	23	21.7	20.7	19	16	-
100DMLV522	22	30		32.1	-	-	-	29.4	29.1	28.2	27.5	26.5	25	-

PERFORMANCE CURVE

50 Hz

Rev. E

TYPE KEY

PUMP

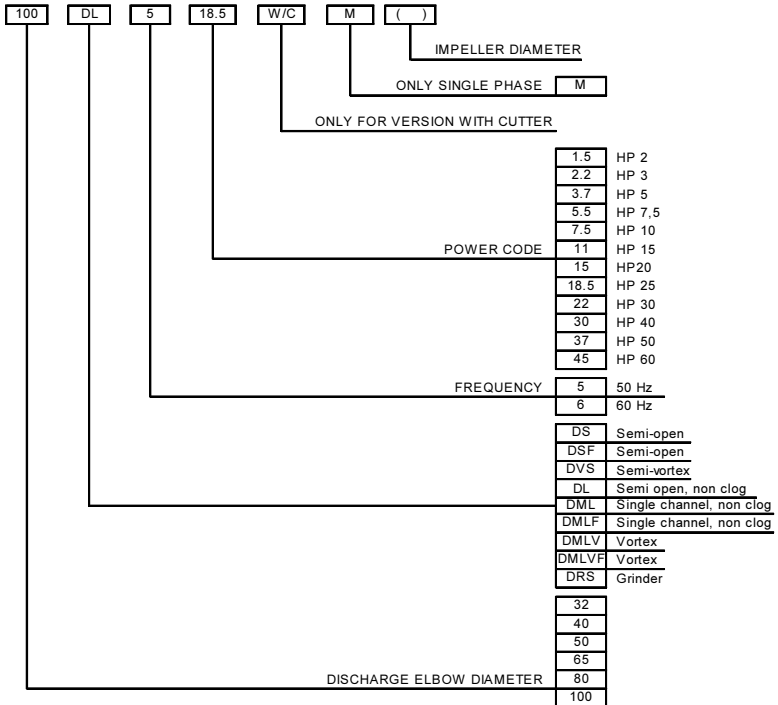

QDC (QUICK DISCHARGE CONNECTOR)

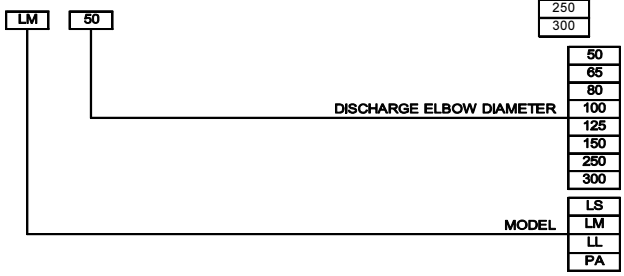

PERFORMANCE CURVE SPECIFICATIONS

The specifications below qualify the curves shown on the following pages.

Tolerances according to ISO 9906 Annex A
The curves refer to effective speed of asynchronous motors at 50 Hz
Measurements were carried out with clean water at 20°C of temperature and with a kinematic viscosity of ν = 1 mm^2/s (1 cSt)
The continuous curves indicate the recommended working range. The dotted curve is only a guide.
In order to avoid the risk of over-heating, the pumps should not be used at a flow rate below 10% of best efficiency point.

Symbols explanation:

Q = volume flow rate
H = total head
P_2 = pump power input (shaft power)
η = pump efficiency

PERFORMANCE CURVE

50 Hz

Rev. E

50DS51.5 (1.5 kW)
50DS52.2 (2.2 kW)
50DS53.7 (3.7 kW)

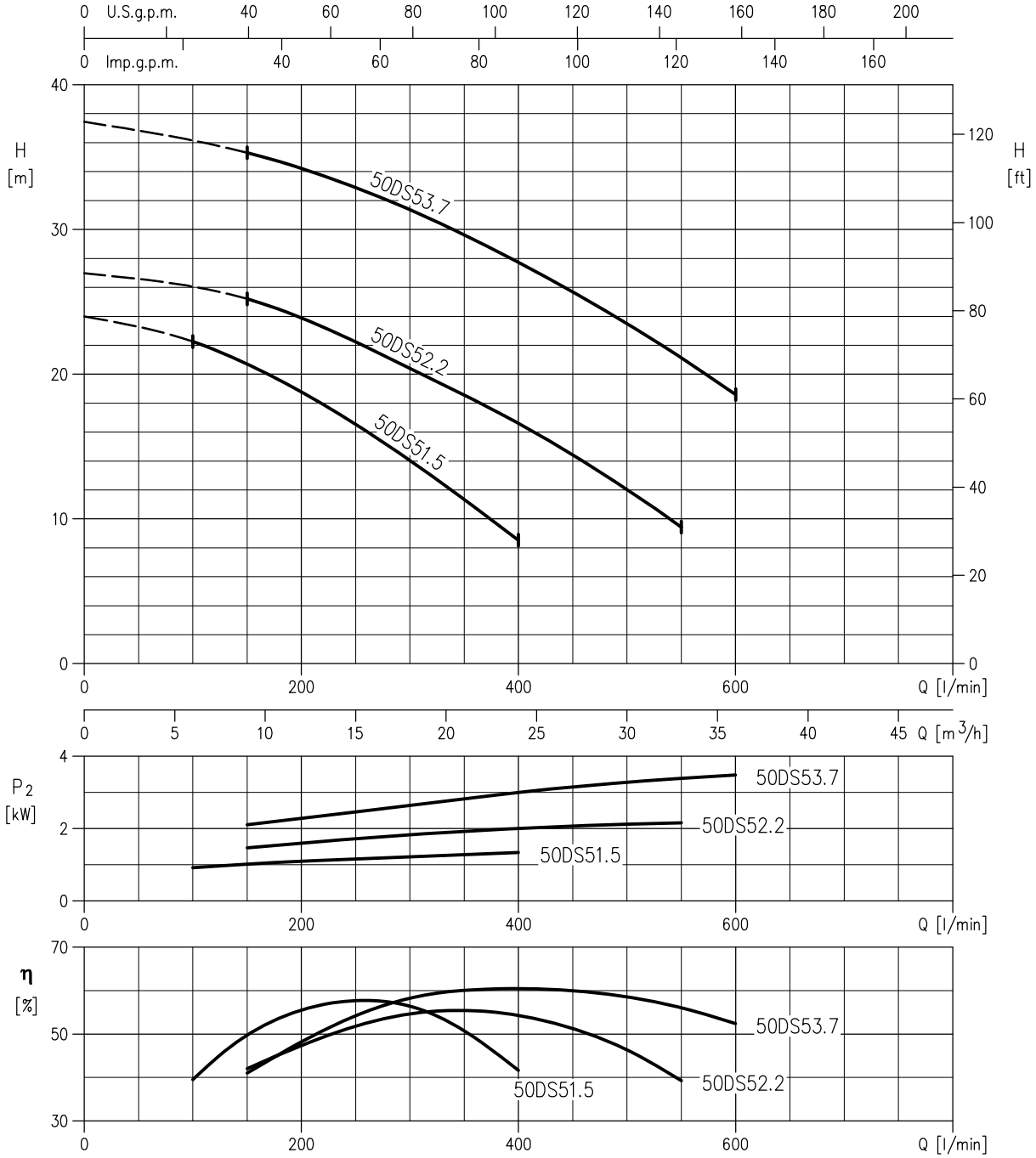

Rotation speed ≈ 2850 min^{-1}
Test standard: ISO 9906 – Annex A

PERFORMANCE CURVE

50 Hz

Rev. E

65DS51.5 (1.5 kW)

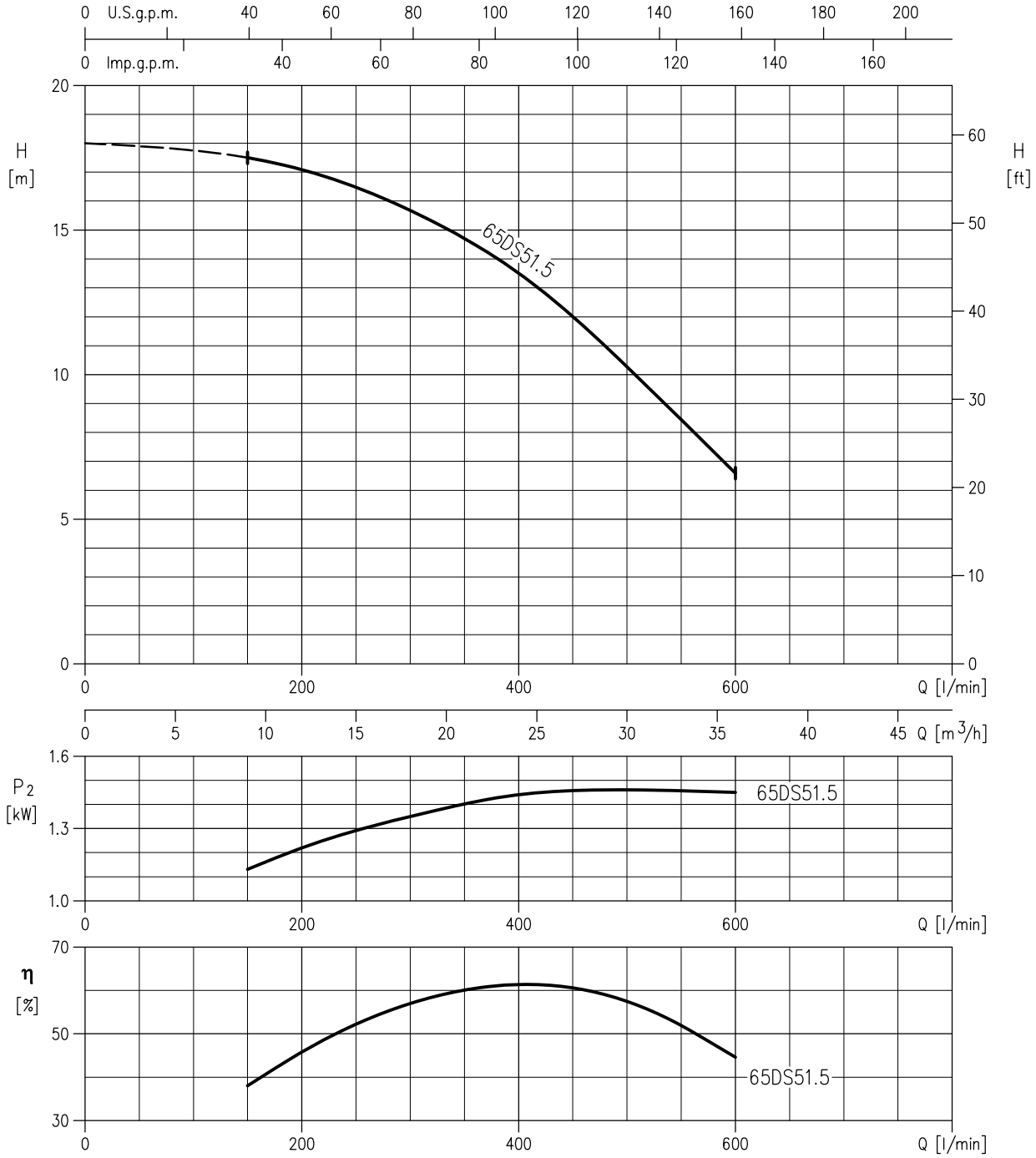

Rotation speed ≈ 2850 min^{-1}

Test standard: ISO 9906 – Annex A

PERFORMANCE CURVE

50 Hz

Rev. E

80DS52.2 (2.2 kW)
80DS53.7 (3.7 kW)

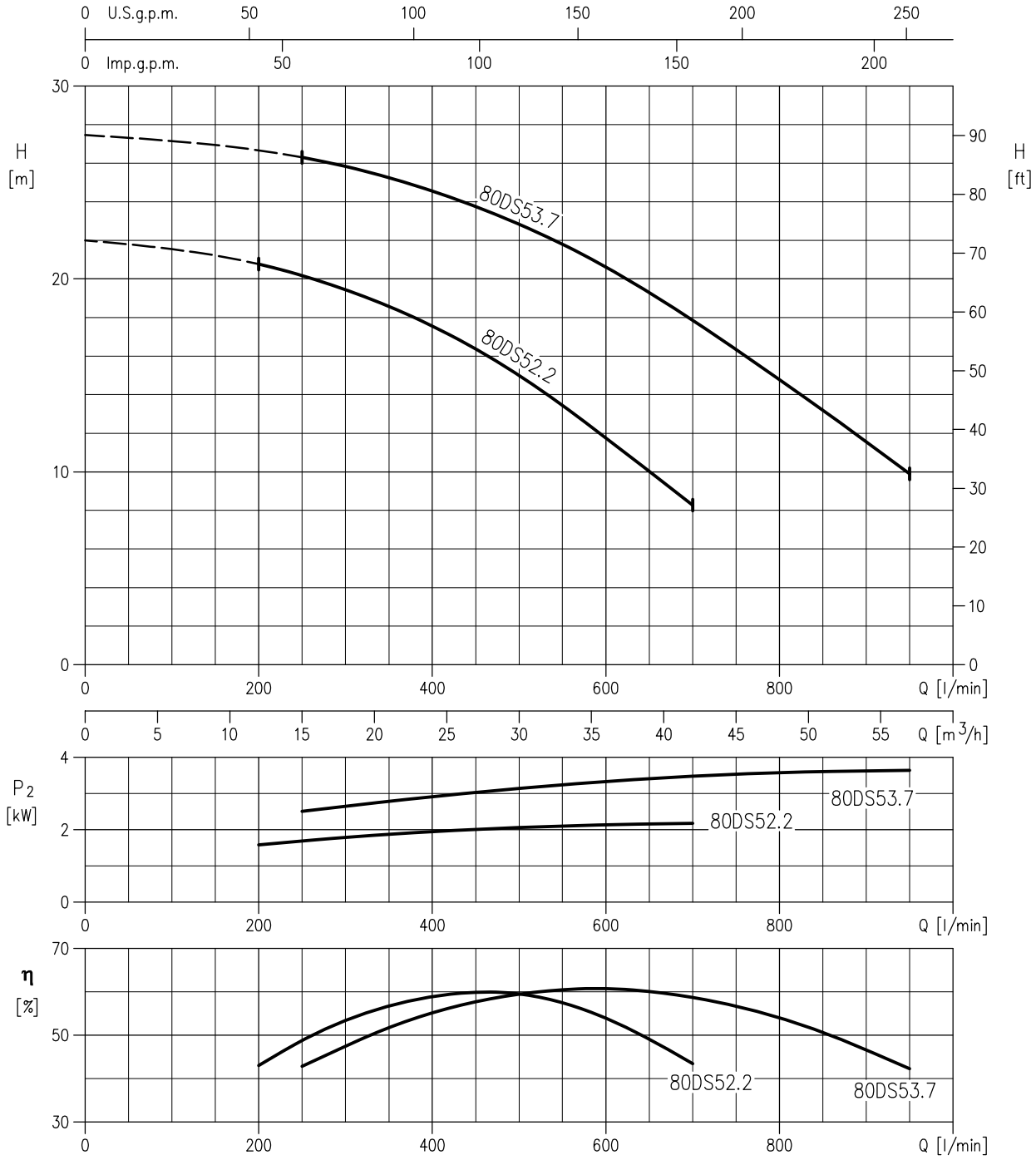

Rotation speed ≈ 2850 min^{-1}
Test standard: ISO 9906 – Annex A

PERFORMANCE CURVE

50 Hz

Rev. E

100DS55.5 (5.5 kW)
100DS57.5 (7.5 kW)

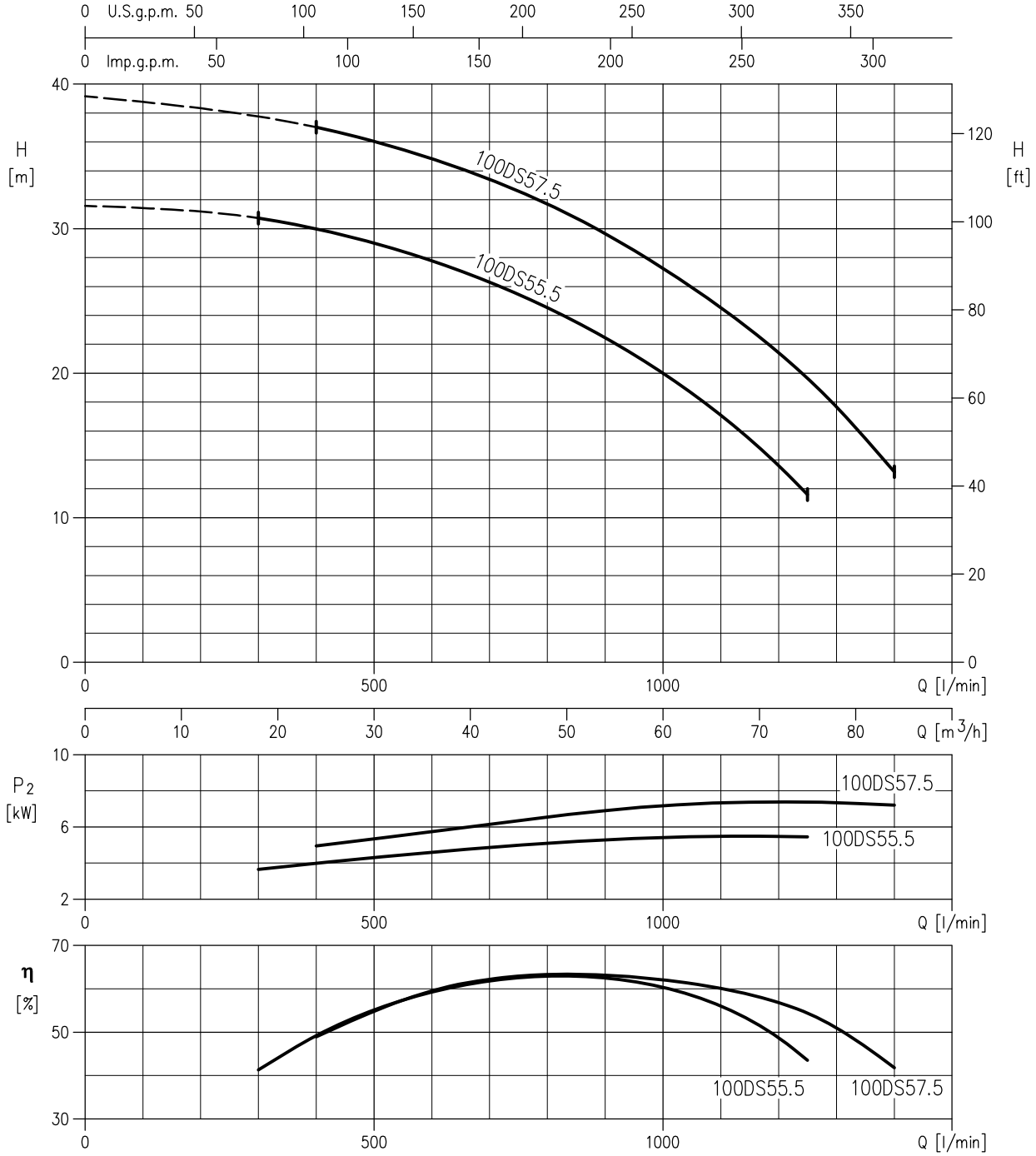

Rotation speed ≈ 2850 min^{-1}
Test standard: ISO 9906 – Annex A

PERFORMANCE CURVE

50 Hz

Rev. E

50DVS51.5 (1.5 kW)

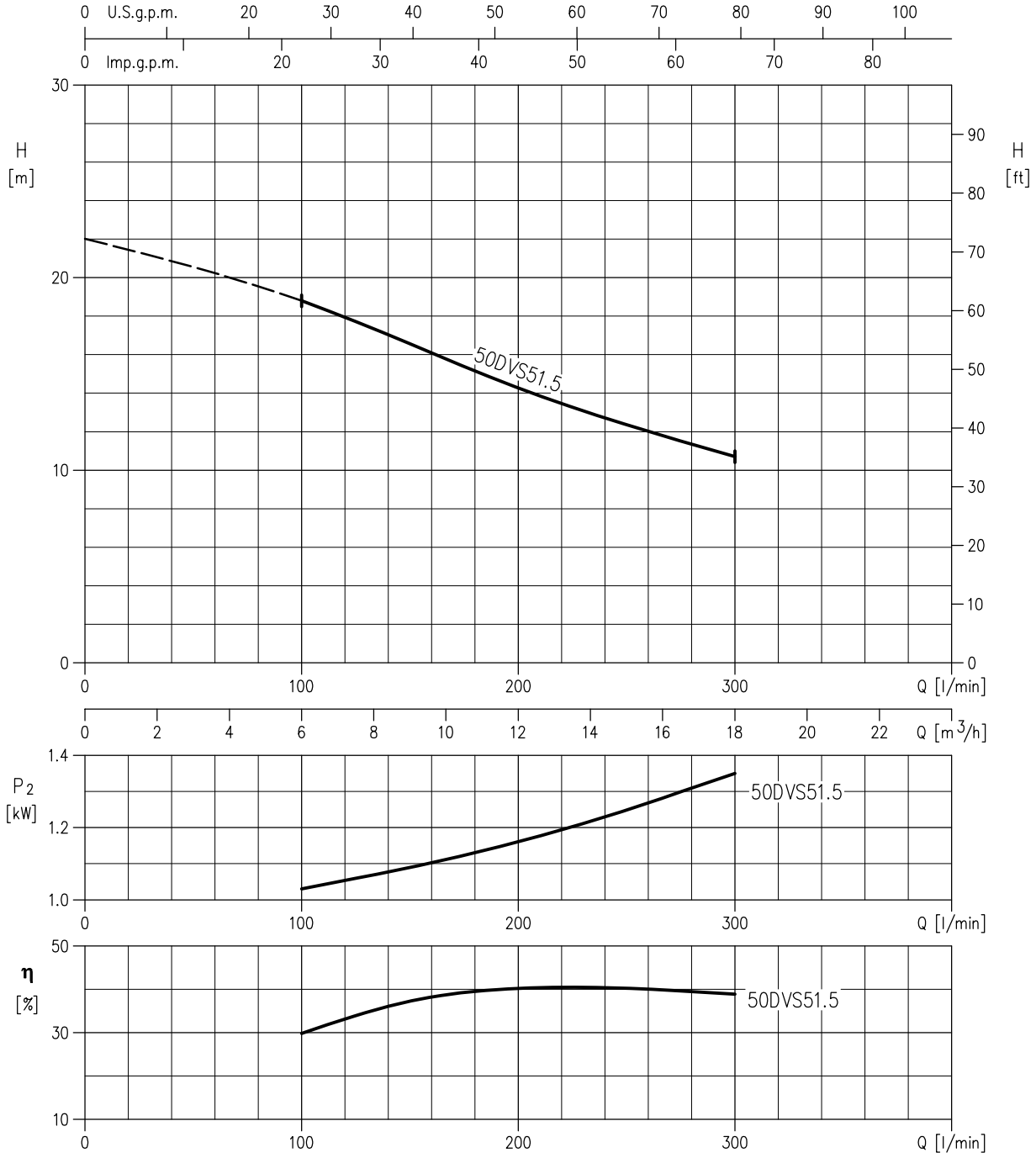

Rotation speed ≈ 2850 min^{-1}

Test standard: ISO 9906 – Annex A

PERFORMANCE CURVE

50 Hz

Rev. E

(80)65DVS51.5 (1.5 kW)
(80)65DVS52.2 (2.2 kW)
(80)65DVS53.7 (3.7 kW)

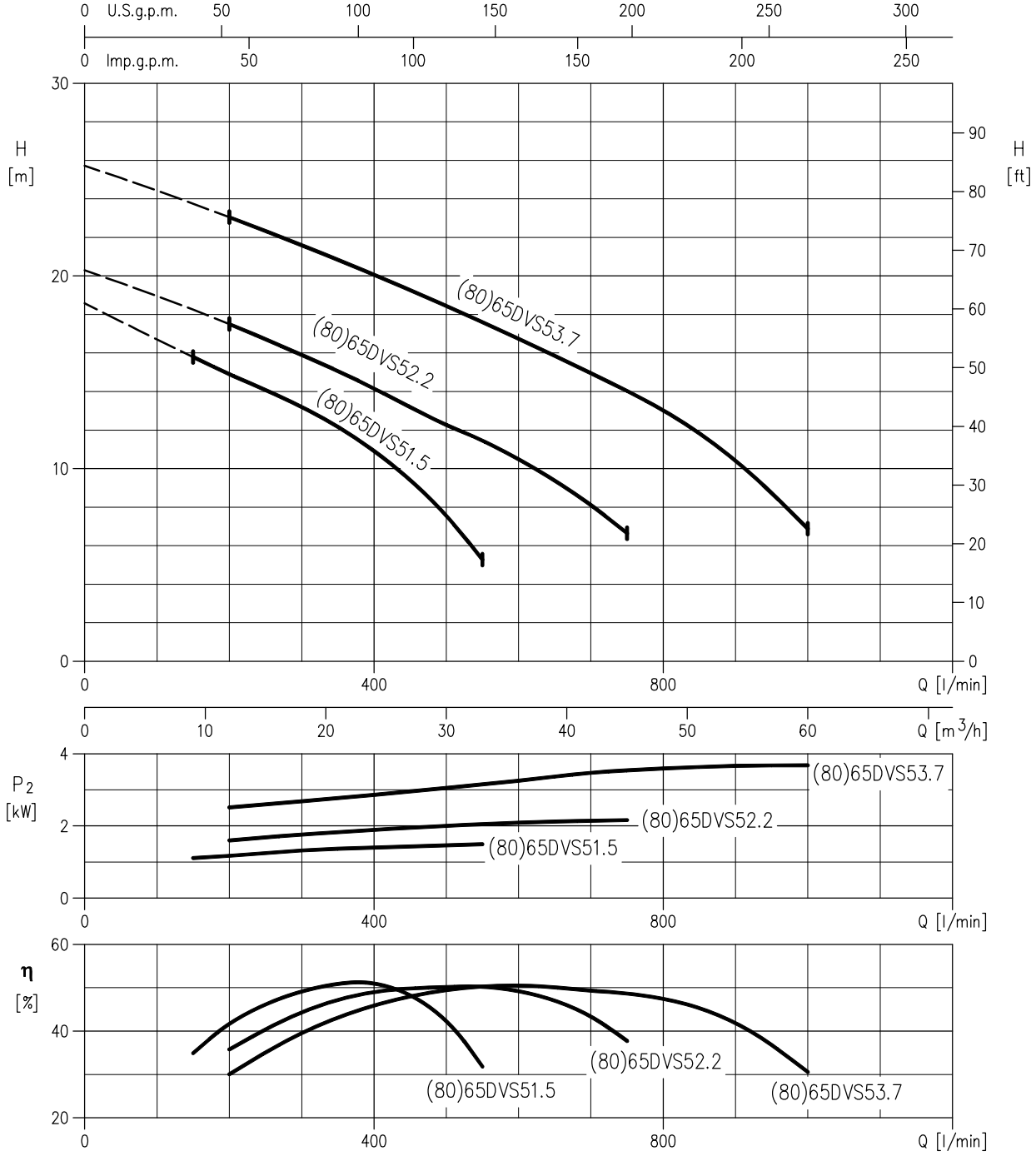

Rotation speed ≈ 2850 min^{-1}

Test standard: ISO 9906 – Annex A

PERFORMANCE CURVE

50 Hz

Rev. E

65DL51.5 (1.5 kW)

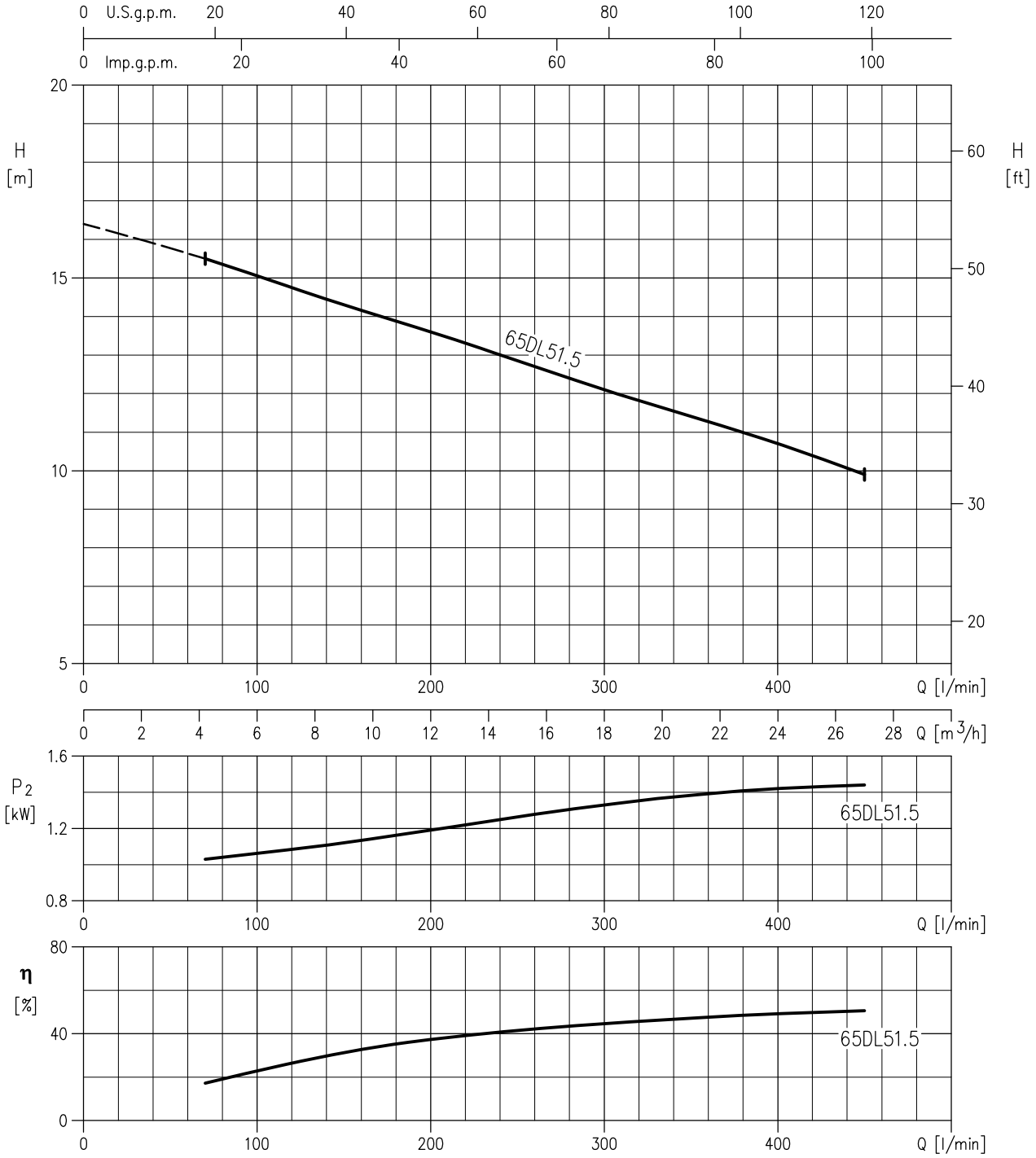

Rotation speed ≈ 1450 min^{-1}

Test standard: ISO 9906 – Annex A

PERFORMANCE CURVE

50 Hz

Rev. E

80DL51.5 (1.5 kW)
80DL52.2 (2.2 kW)
80DL53.7 (3.7 kW)
80DLC55.5 (5.5 kW)
80DLC57.5 (7.5 kW)

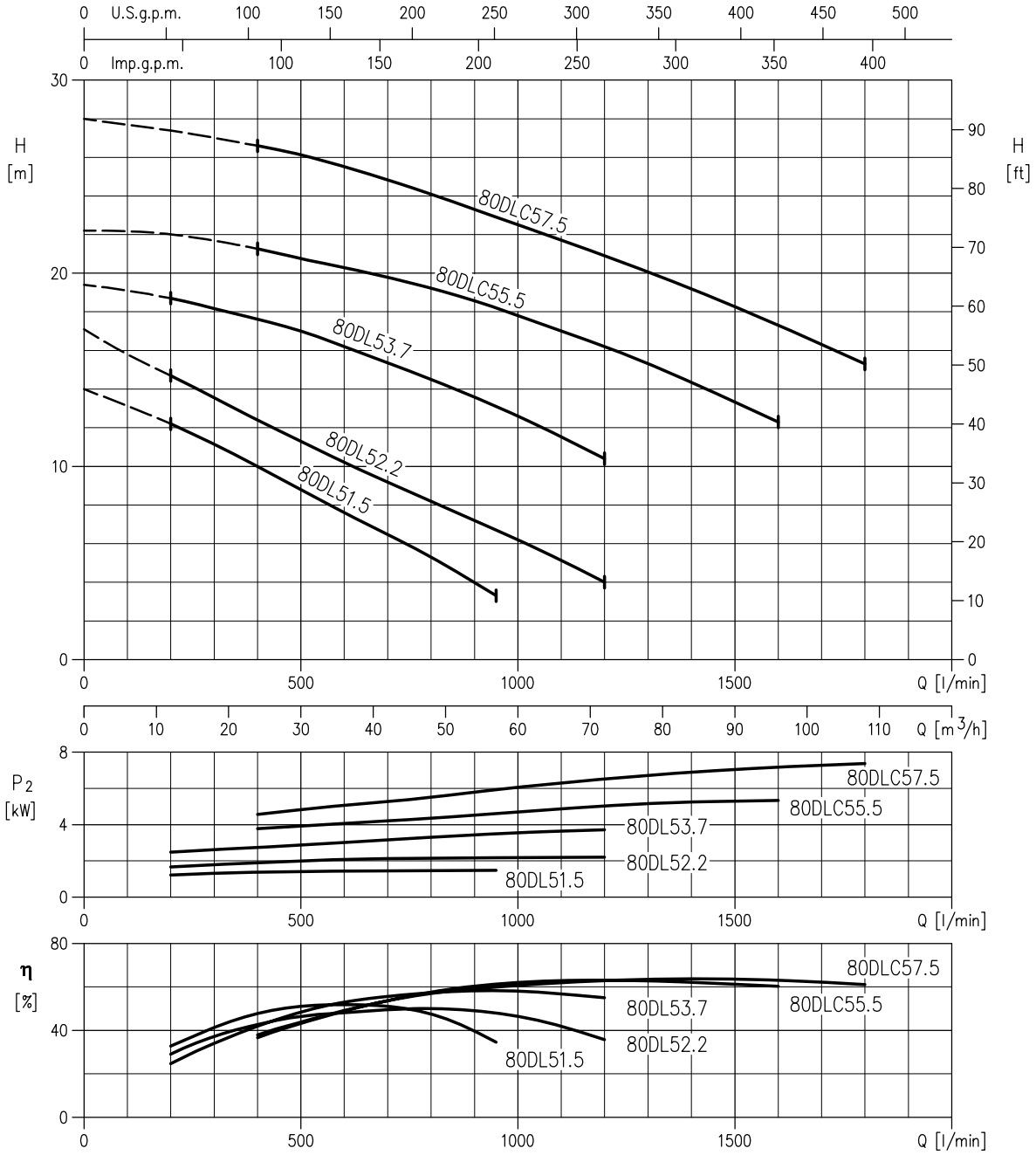

Rotation speed ≈ 1450 min^{-1}

Test standard: ISO 9906 – Annex A

PERFORMANCE CURVE

50 Hz

Rev. E

100DL53.7 (3.7 kW)
100DLB55.5 (5.5 kW)
100DLB57.5 (7.5 kW)
100DL511 (11 kW)
100DL515 (15 kW)
100DL518.5 (18.5 kW)

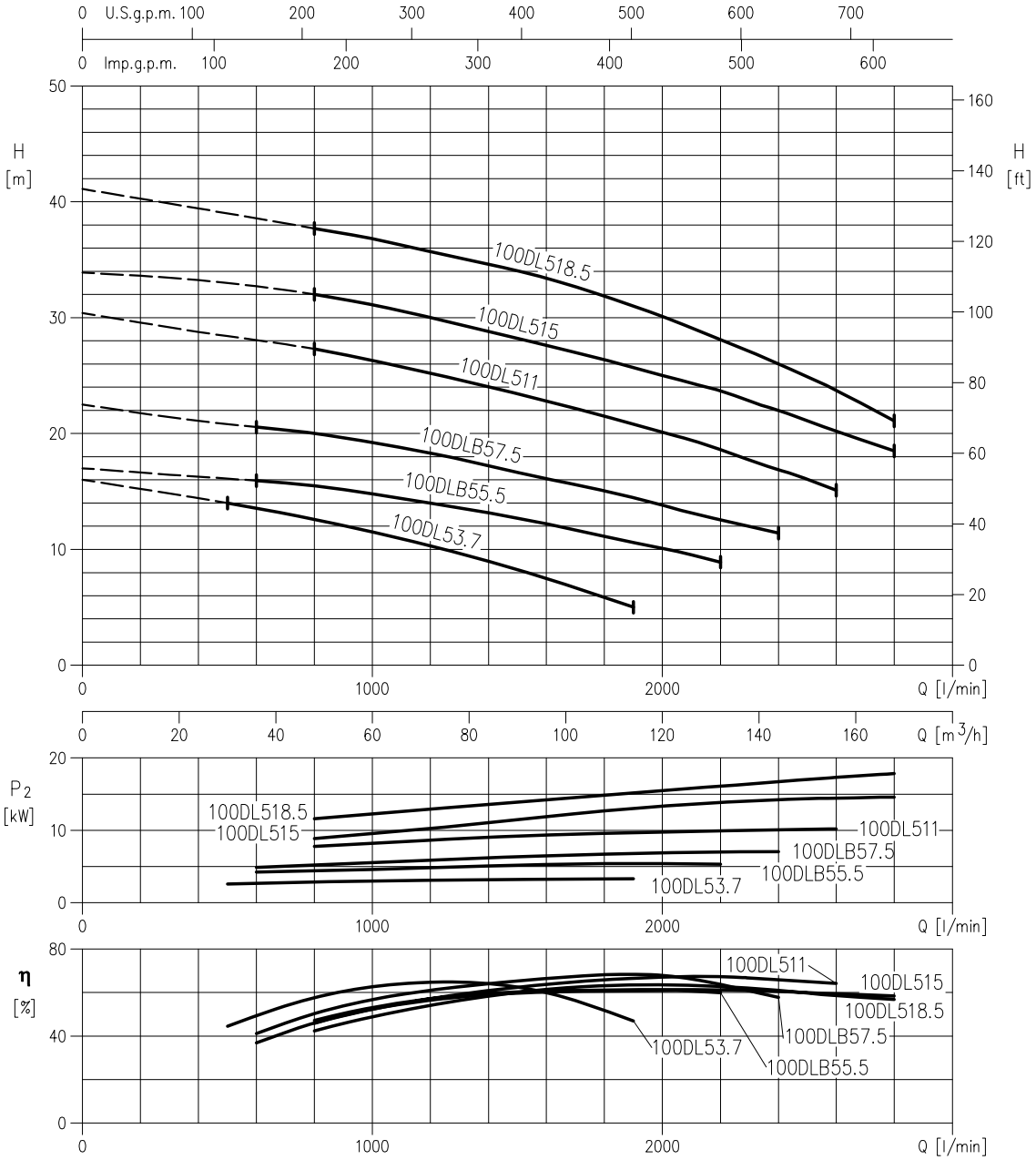

Rotation speed ≈ 1450 min^{-1}
Test standard: ISO 9906 – Annex A

PERFORMANCE CURVE

50 Hz

Rev. E

100DLC55.5 (5.5 kW)
100DLC57.5 (7.5 kW)

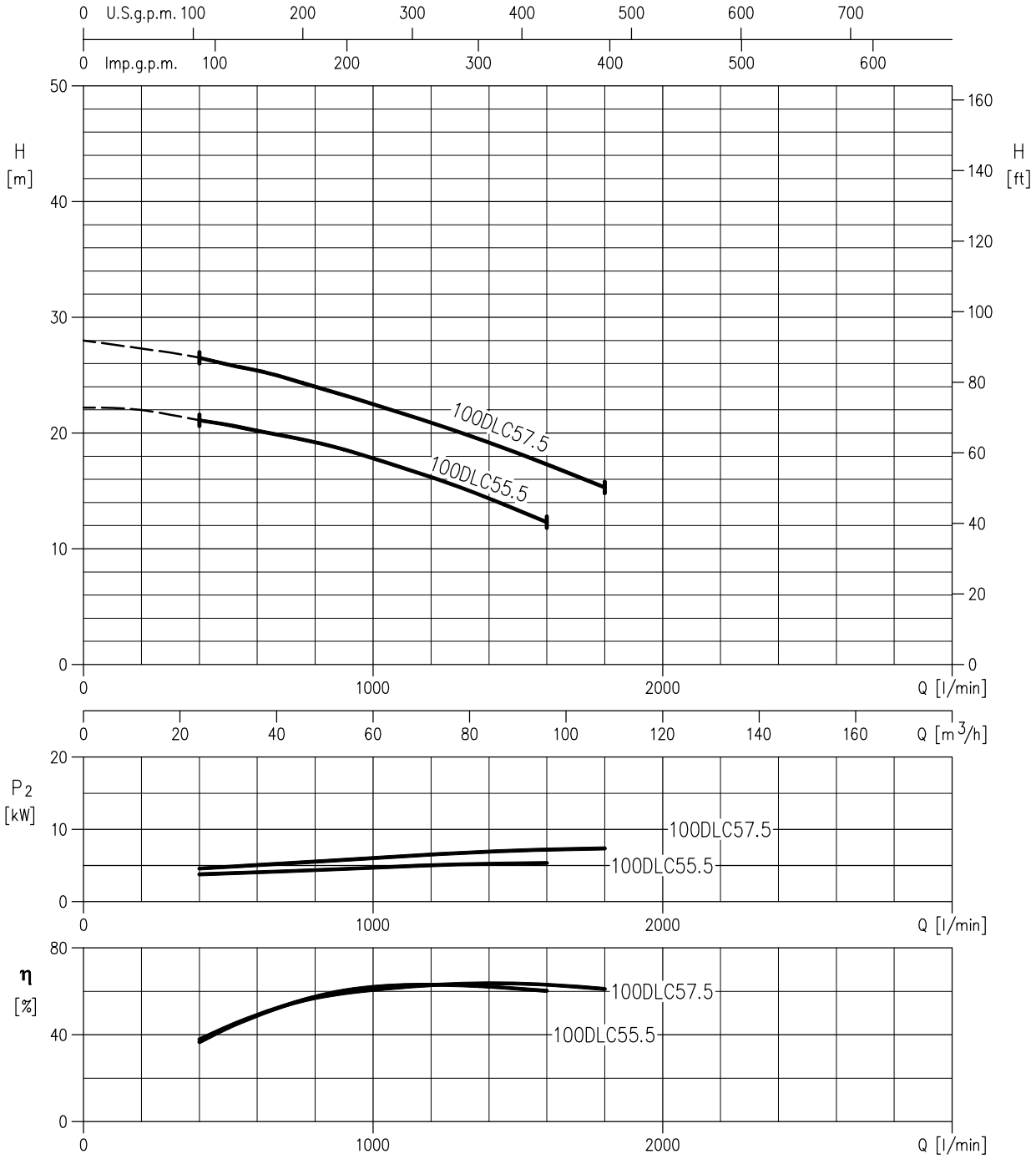

Rotation speed ≈ 1450 min^{-1}
Test standard: ISO 9906 – Annex A

PERFORMANCE CURVE

50 Hz

Rev. E

150DL55.5 (5.5 kW)
150DL57.5 (7.5 kW)
150DL511 (11 kW)
150DL515 (15 kW)
150DL518.5 (18.5 kW)
150DL522 (22 kW)

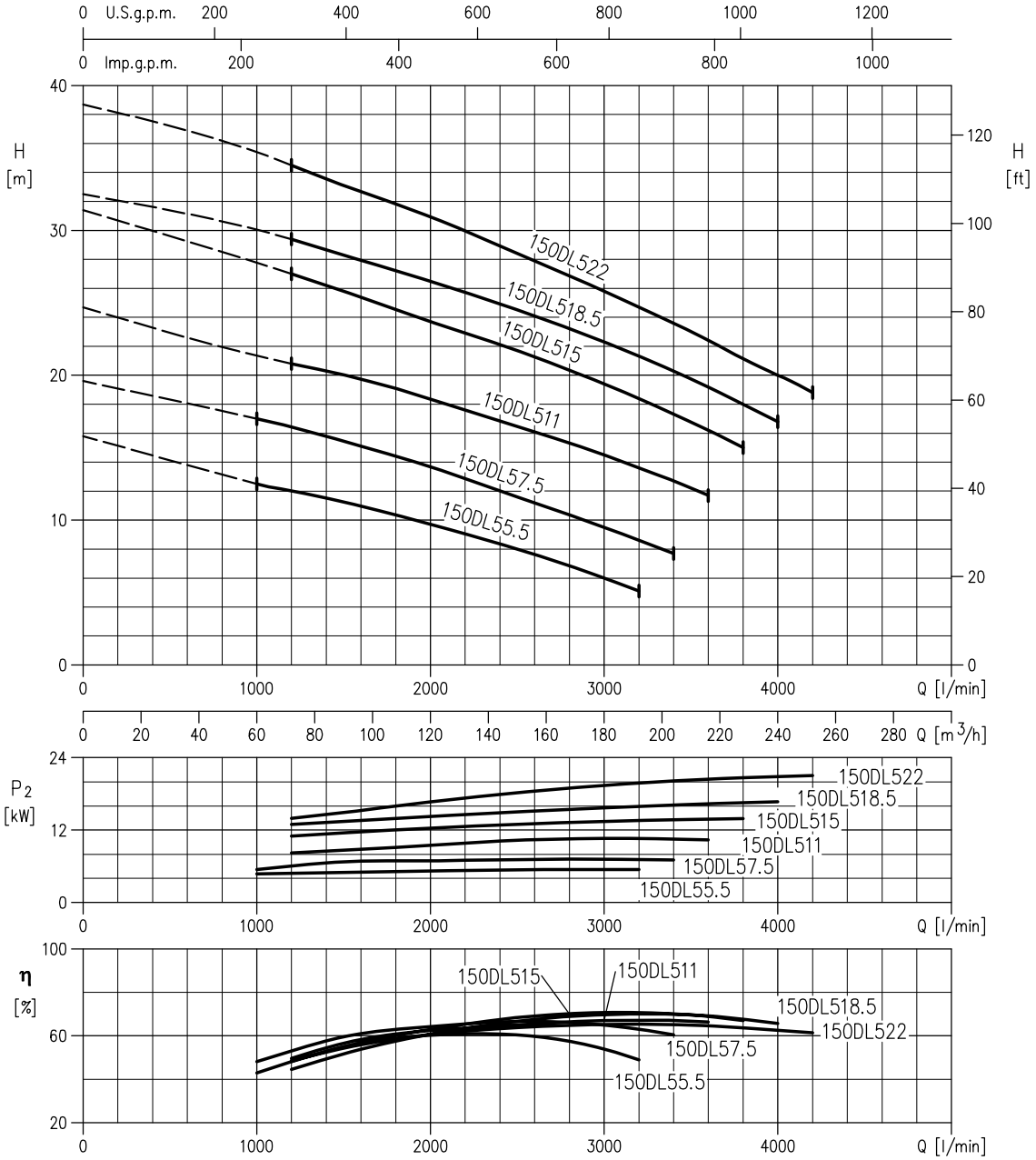

Rotation speed ≈ 1450 min^{-1}
Test standard: ISO 9906 – Annex A

PERFORMANCE CURVE

50 Hz

Rev. E

150DL530 (30 kW)
150DL537 (37 kW)
150DL545 (45 kW)

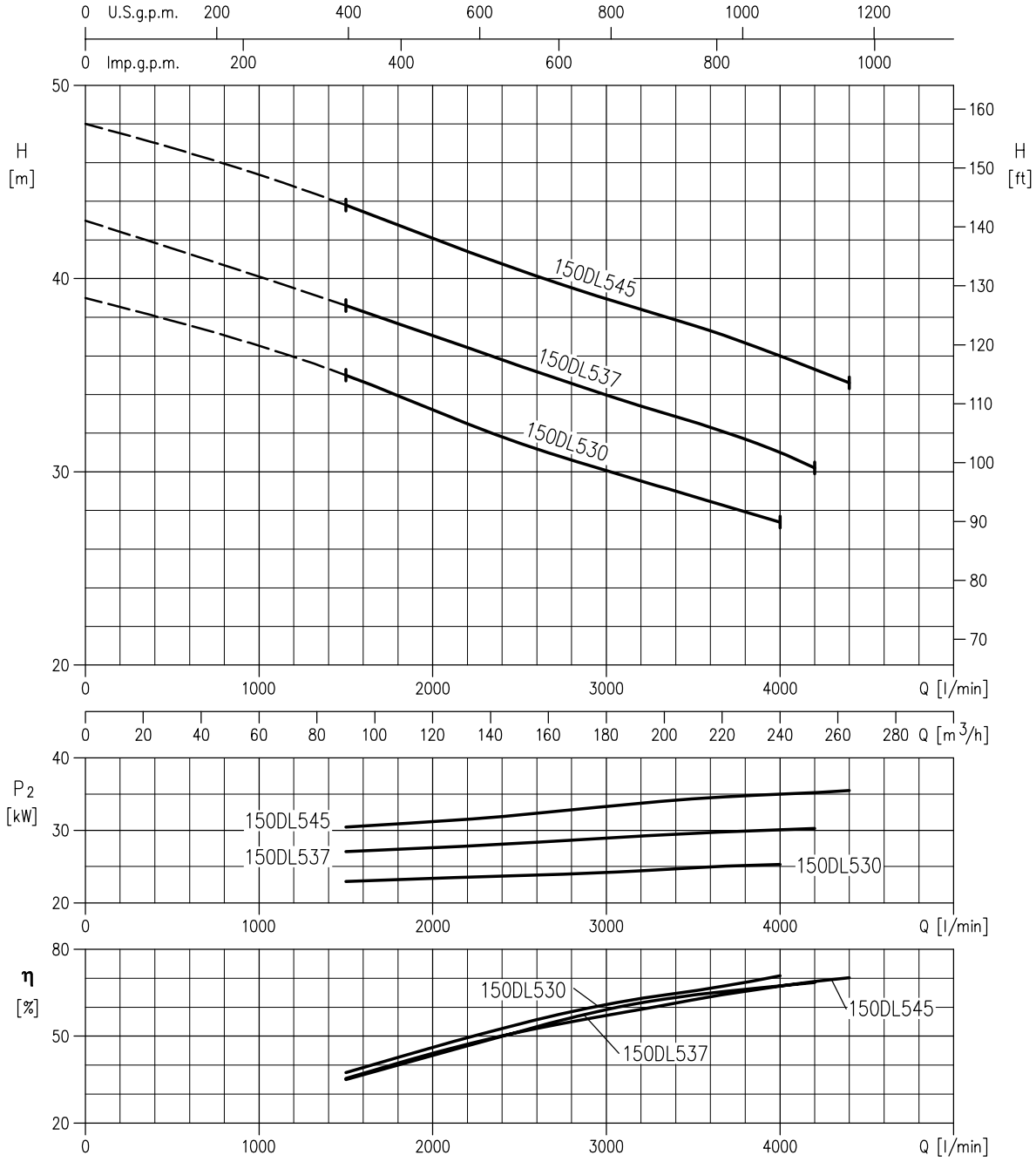

Rotation speed ≈ 1450 min^{-1}
Test standard: ISO 9906 – Annex A

PERFORMANCE CURVE

50 Hz

Rev. E

200DL55.5 (5.5 kW)
200DL57.5 (7.5 kW)
200DL511 (11 kW)
200DL515 (15 kW)
200DL518.5 (18.5 kW)
200DL522 (22 kW)

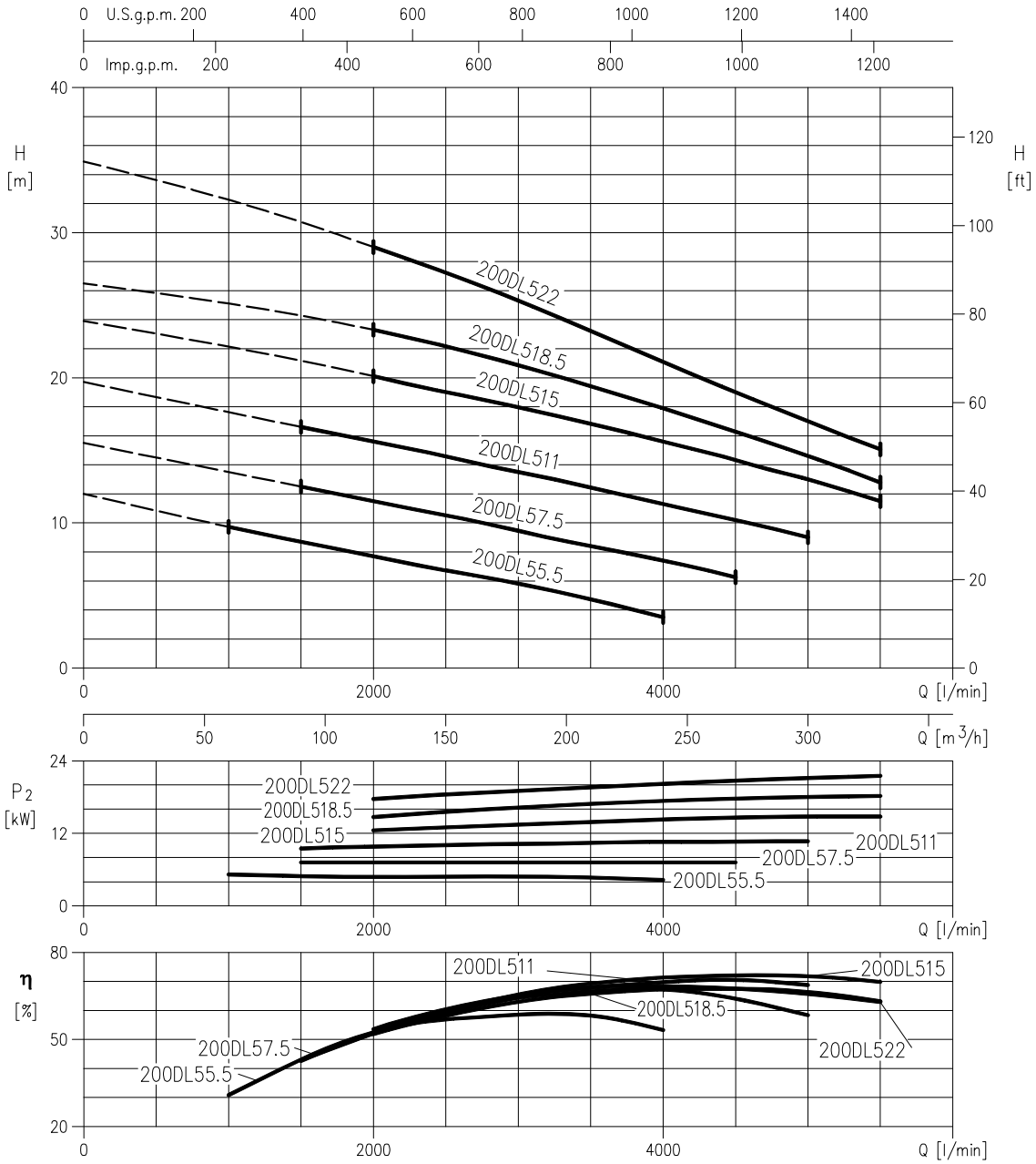

Rotation speed ≈ 1450 min^{-1}
Test standard: ISO 9906 – Annex A

PERFORMANCE CURVE

50 Hz

Rev. E

200DL530 (30 kW)
200DL537 (37 kW)
200DL545 (45 kW)

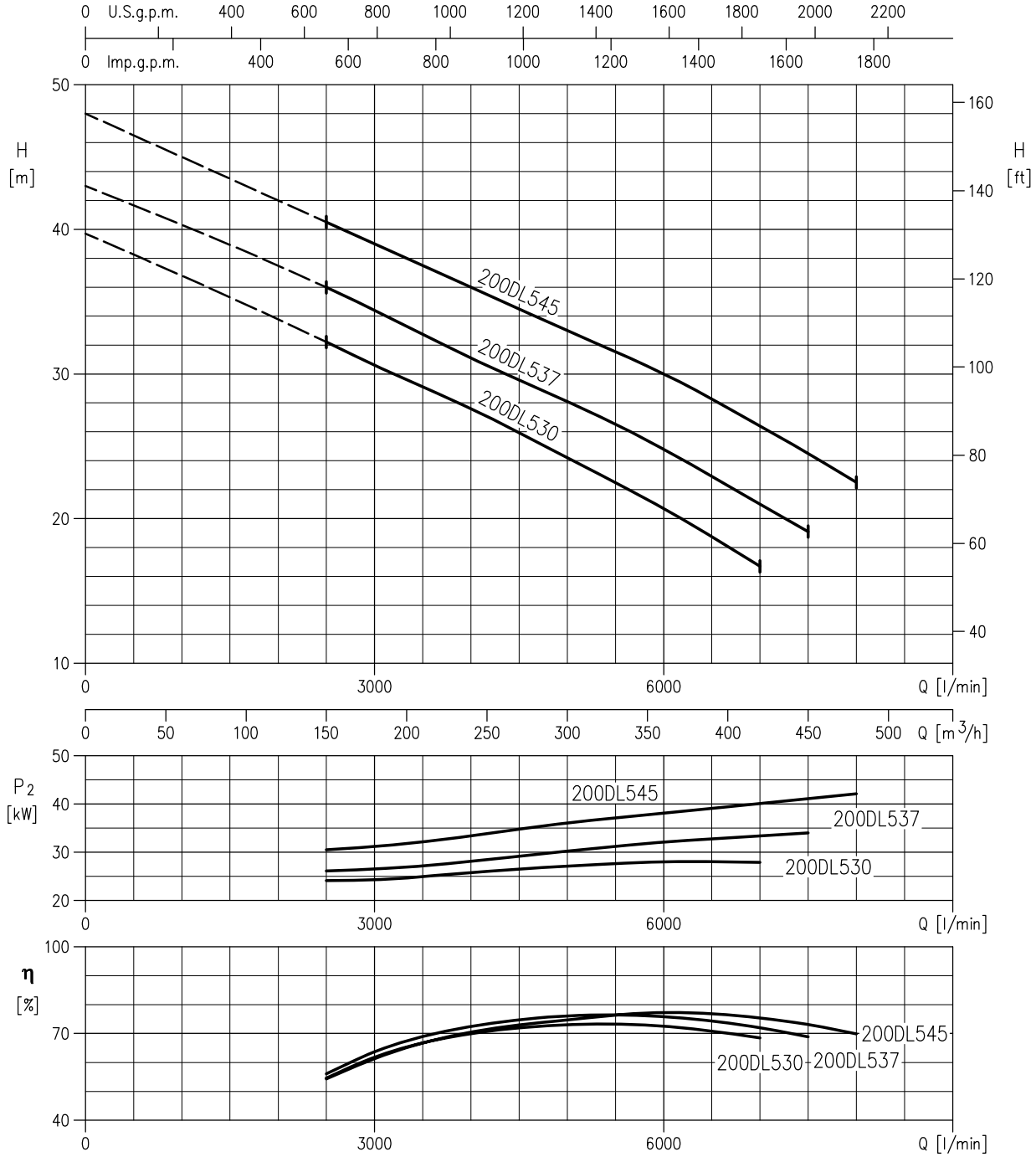

Rotation speed ≈ 1450 min^{-1}
Test standard: ISO 9906 – Annex A

PERFORMANCE CURVE

50 Hz

Rev. E

250DL57.5 (7.5 kW)
250DL511 (11 kW)
250DL515 (15 kW)
250DL518.5 (18.5 kW)
250DL522 (22 kW)

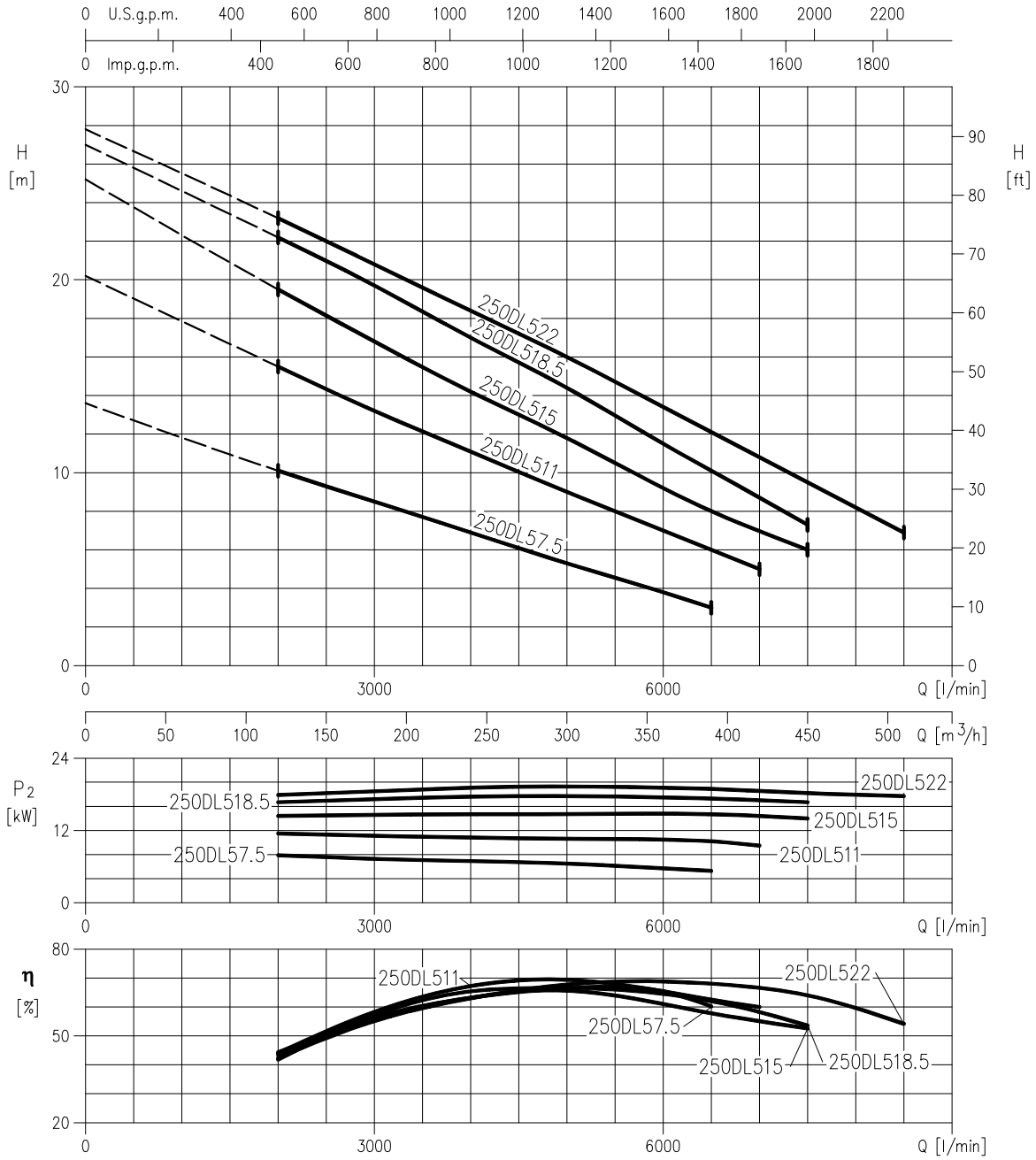

Rotation speed ≈ 1450 min^{-1}

Test standard: ISO 9906 – Annex A

PERFORMANCE CURVE

50 Hz

Rev. E

250DL530 (30 kW)
250DL537 (37 kW)
250DL545 (45 kW)

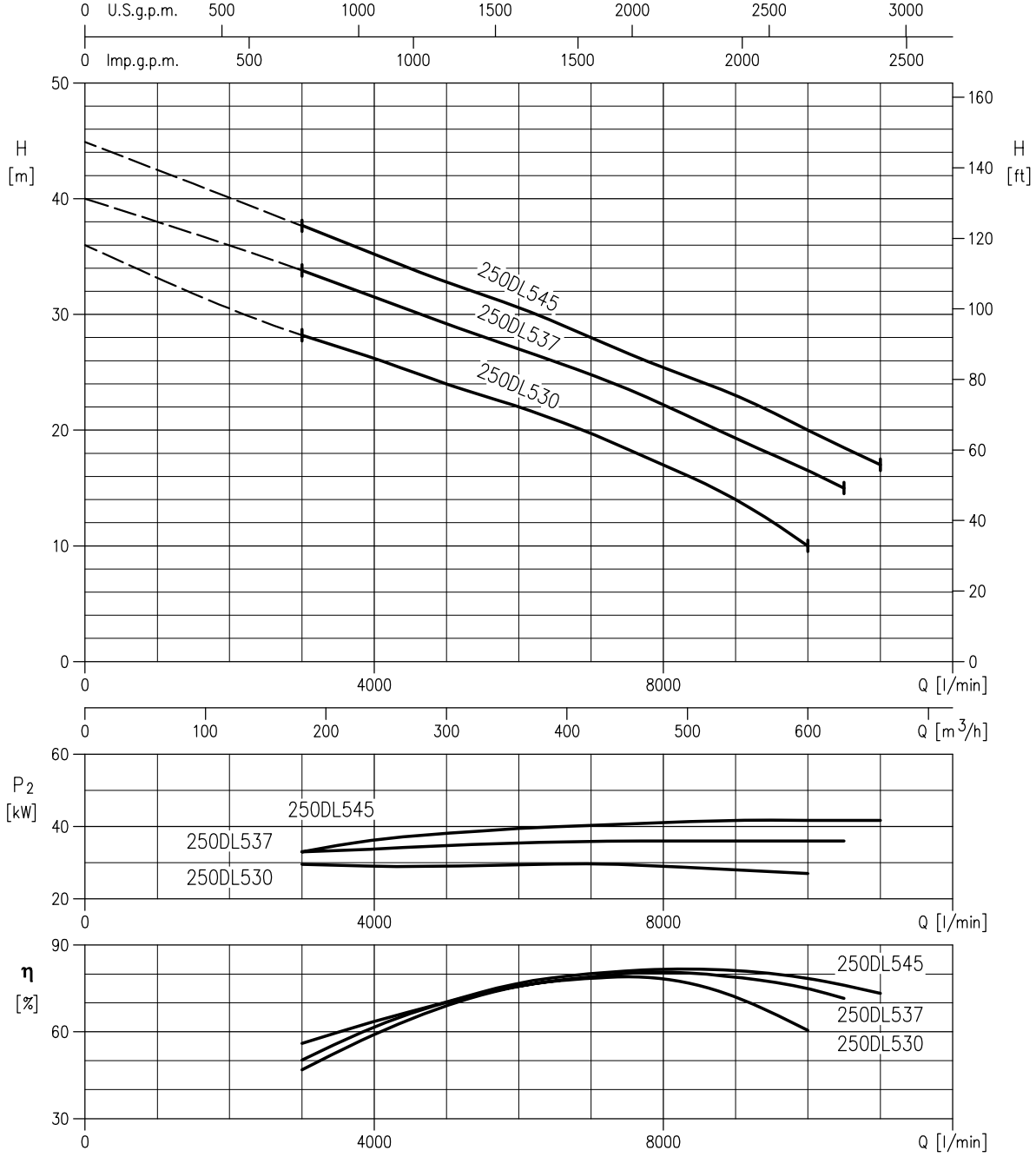

Rotation speed ≈ 1450 min^{-1}
Test standard: ISO 9906 – Annex A

PERFORMANCE CURVE

50 Hz

Rev. E

300DL511 (11 kW)
300DL515 (15 kW)
300DL518.5 (18.5 kW)
300DL522 (22 kW)

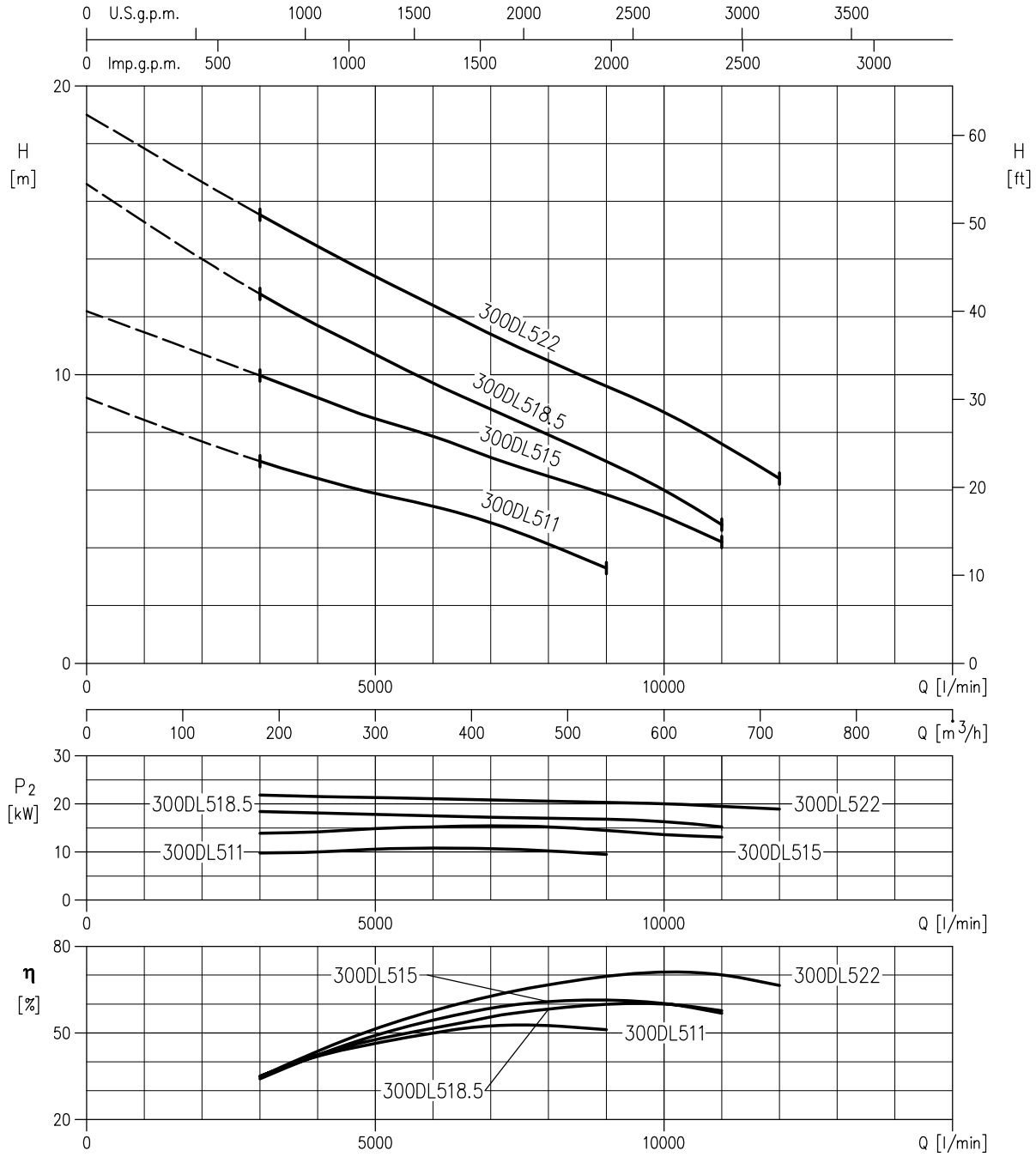

Rotation speed ≈ 1450 min^{-1}
Test standard: ISO 9906 – Annex A

PERFORMANCE CURVE

50 Hz

Rev. E

300DL530 (30 kW)
300DL537 (37 kW)
300DL545 (45 kW)

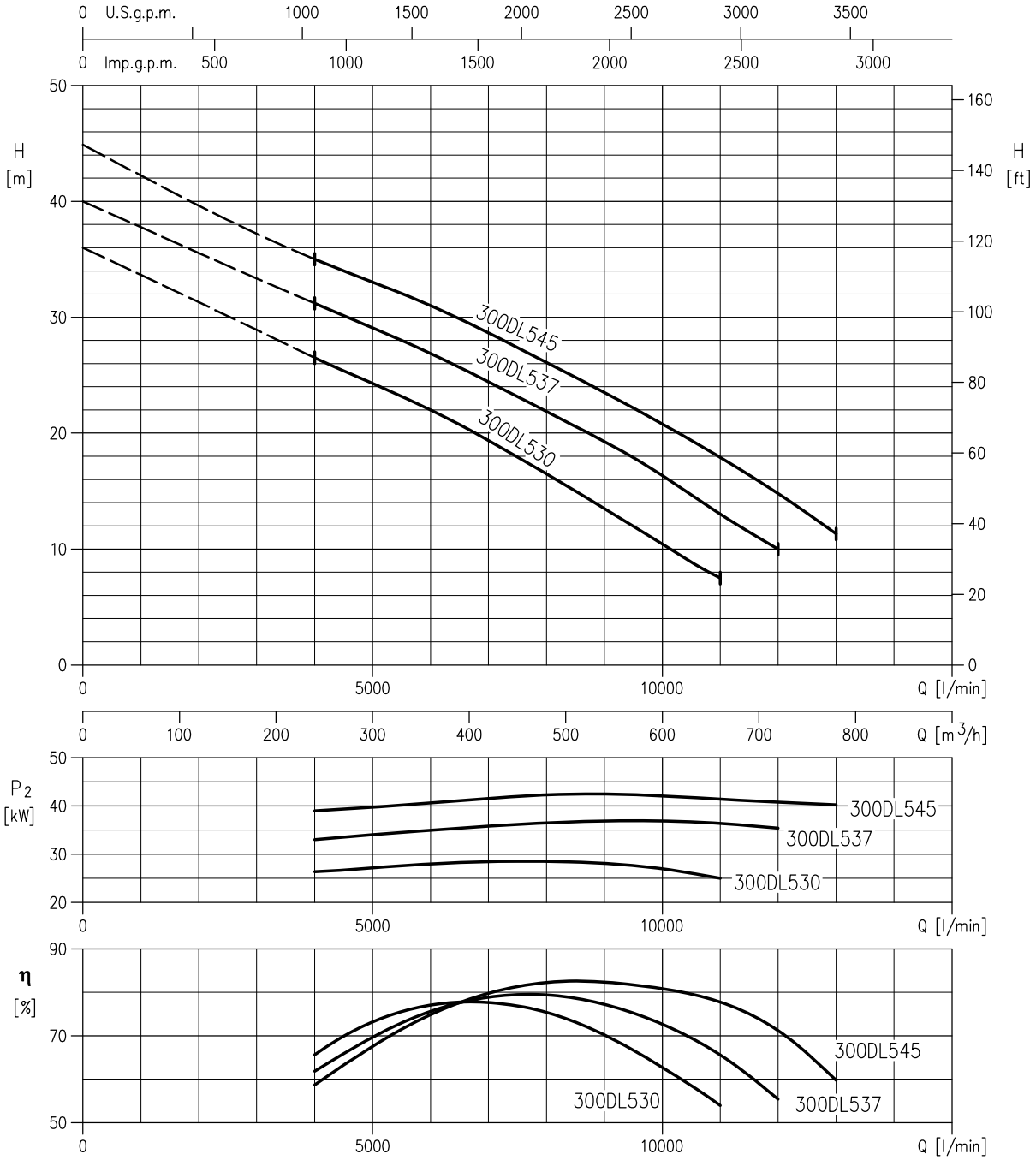

Rotation speed ≈ 1450 min^{-1}
Test standard: ISO 9906 – Annex A

PERFORMANCE CURVE

50 Hz

Rev. E

65DL51.5W/C (1.5 kW)

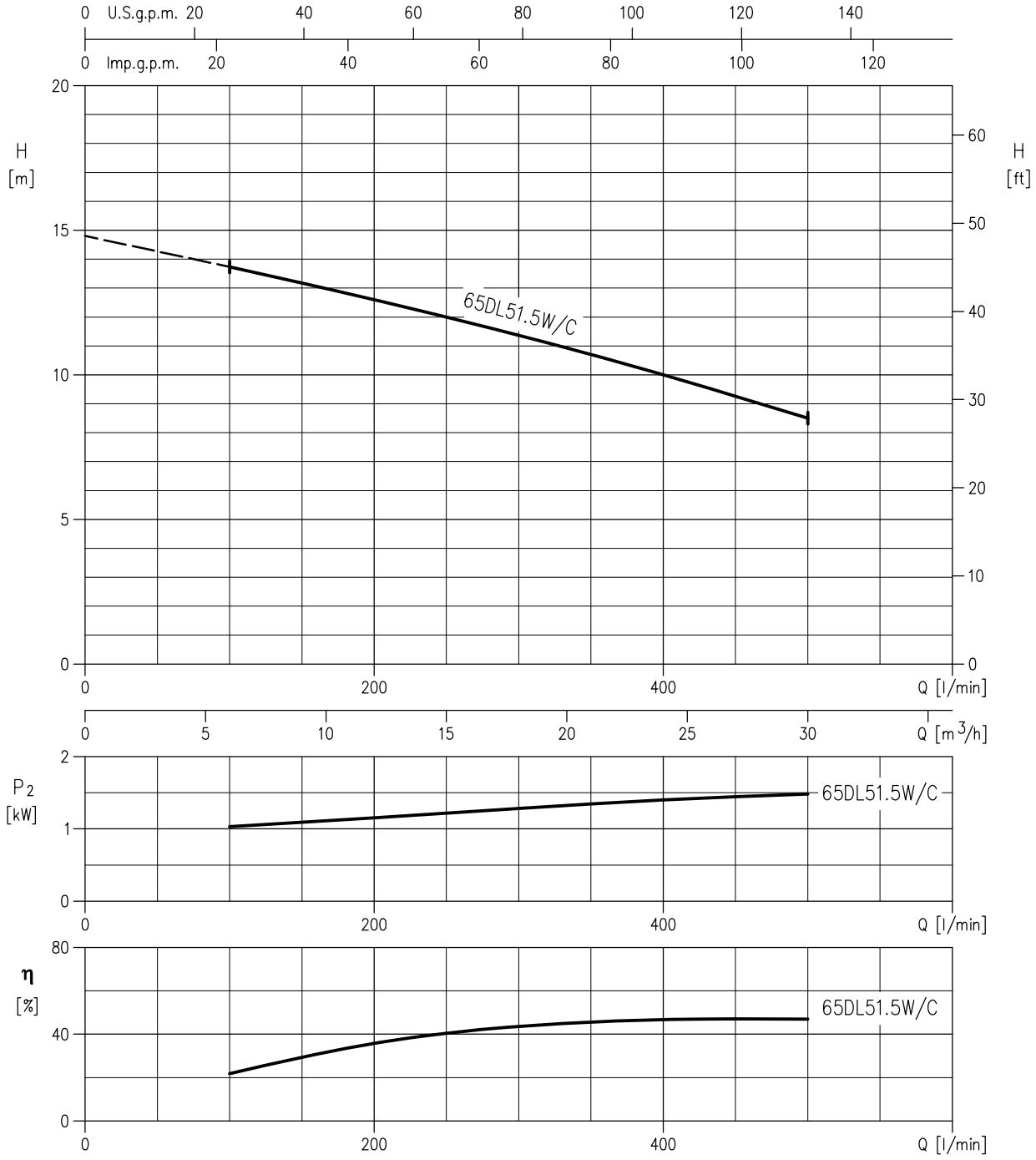

Rotation speed ≈ 1450 min^{-1}

Test standard: ISO 9906 – Annex A

PERFORMANCE CURVE

50 Hz

Rev. E

80DL51.5W/C (1.5 kW)
80DL52.2W/C (2.2 kW)
80DL53.7W/C (3.7 kW)

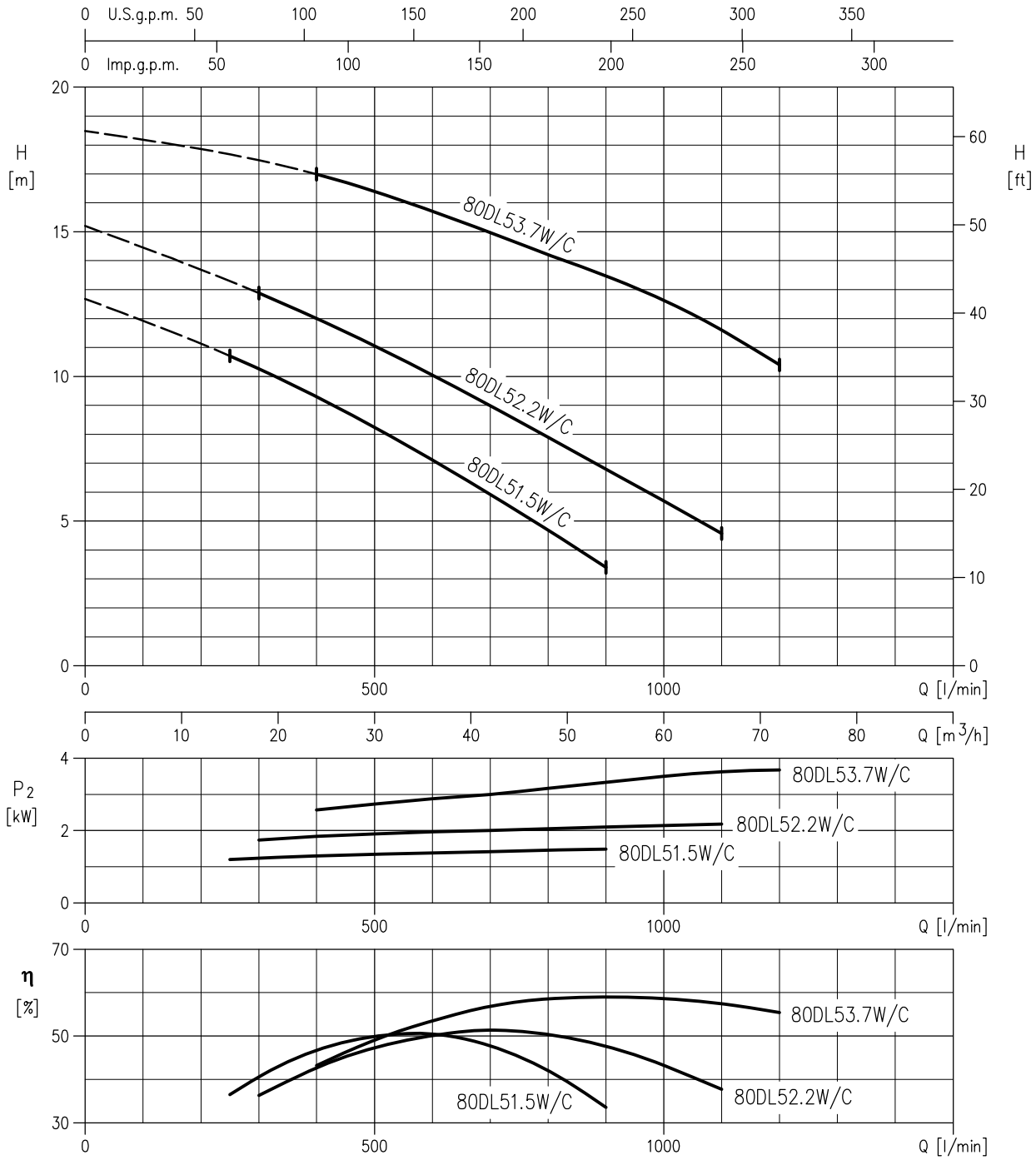

Rotation speed ≈ 1450 min^{-1}

Test standard: ISO 9906 – Annex A

PERFORMANCE CURVE

50 Hz

Rev. E

100DL53.7W/C (3.7 kW)
100DLB55.5W/C (5.5 kW)
100DLB57.5W/C (7.5 kW)

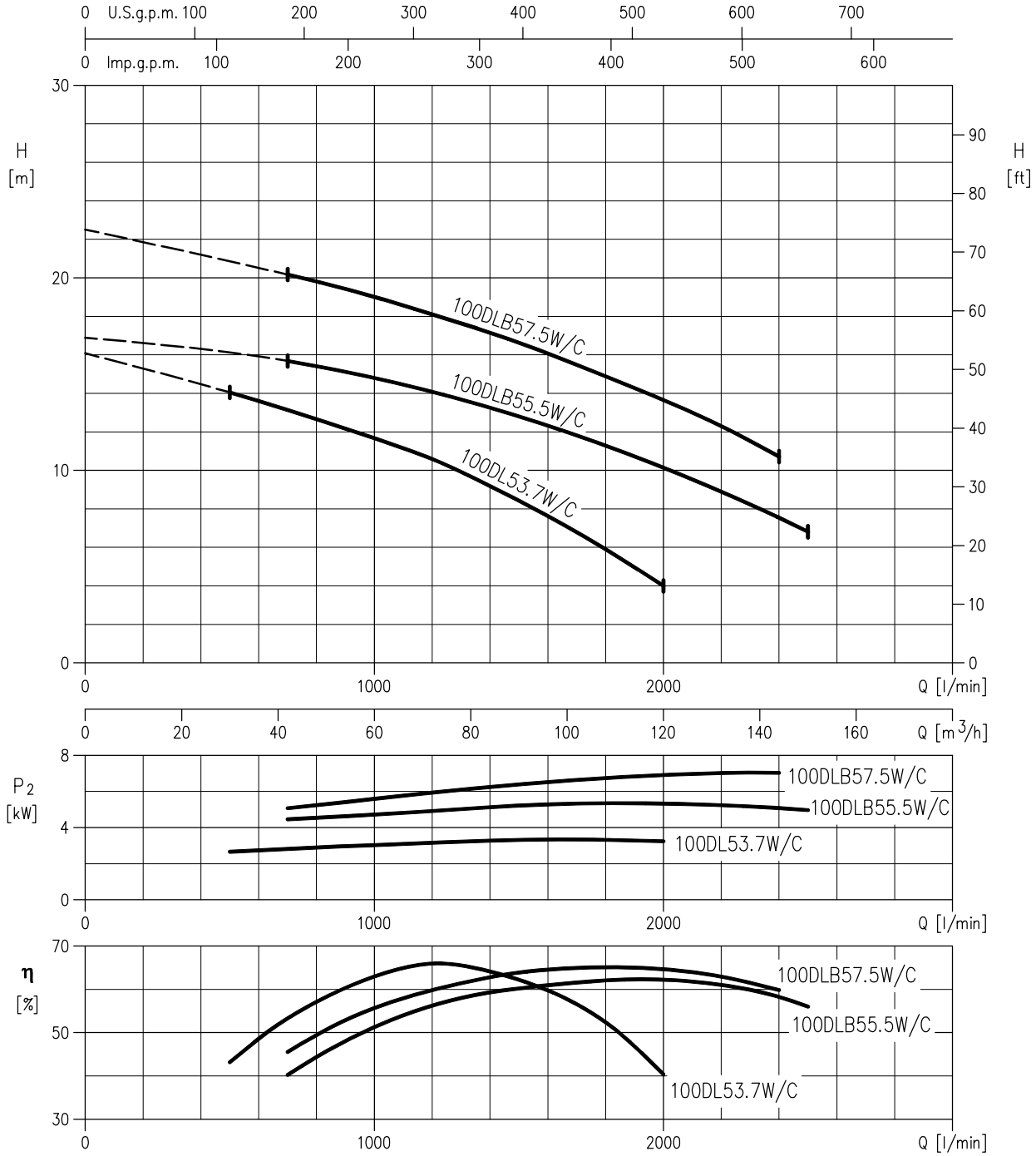

Rotation speed ≈ 1450 min^{-1}

Test standard: ISO 9906 – Annex A

PERFORMANCE CURVE

50 Hz

Rev. E

80DML52.2 (2.2 kW)

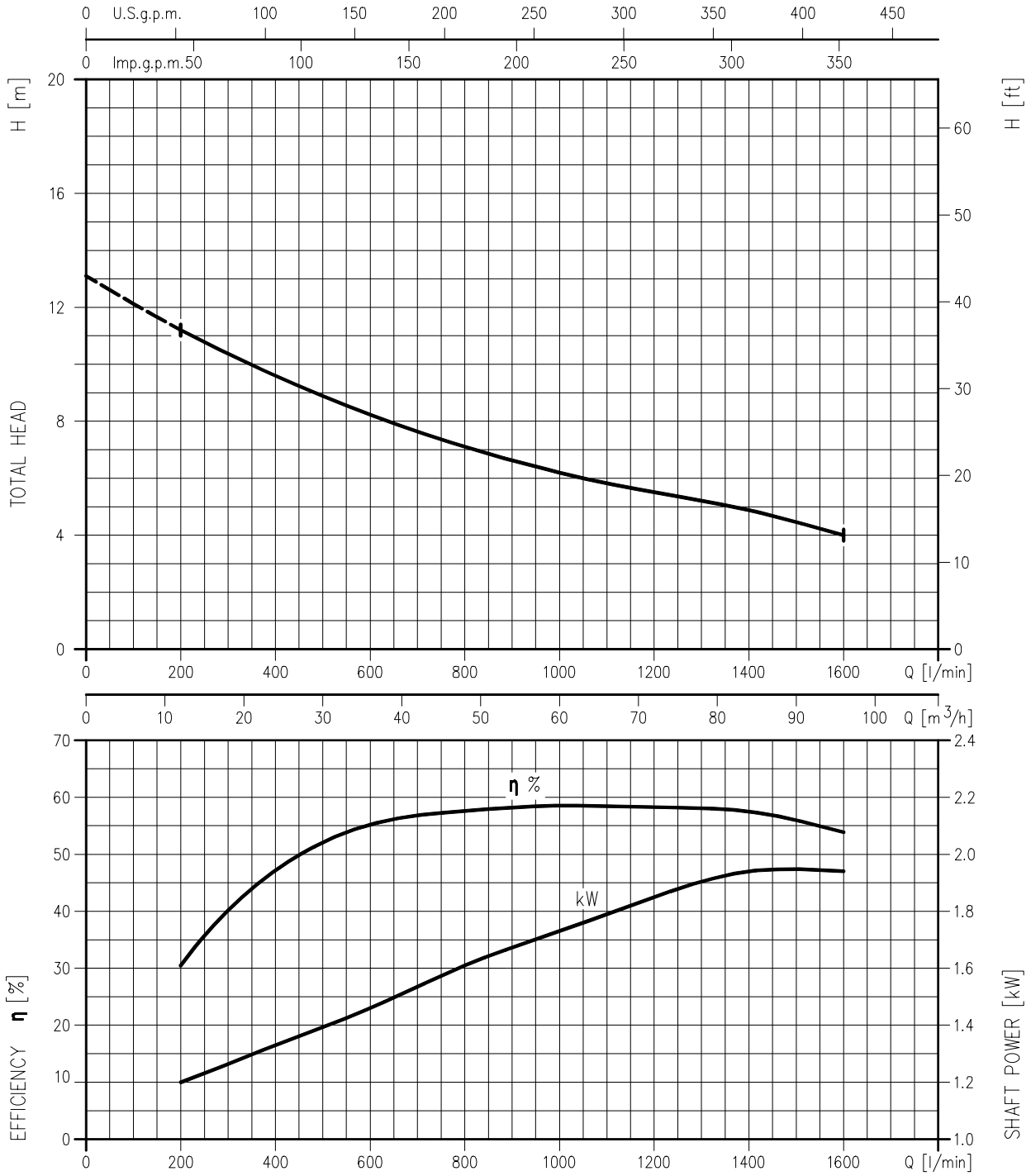

Rotation speed ≈ 1450 min^{-1}

Test standard: ISO 9906 – Annex A

PERFORMANCE CURVE

50 Hz

Rev. E

80DML53.7 (3.7 kW)

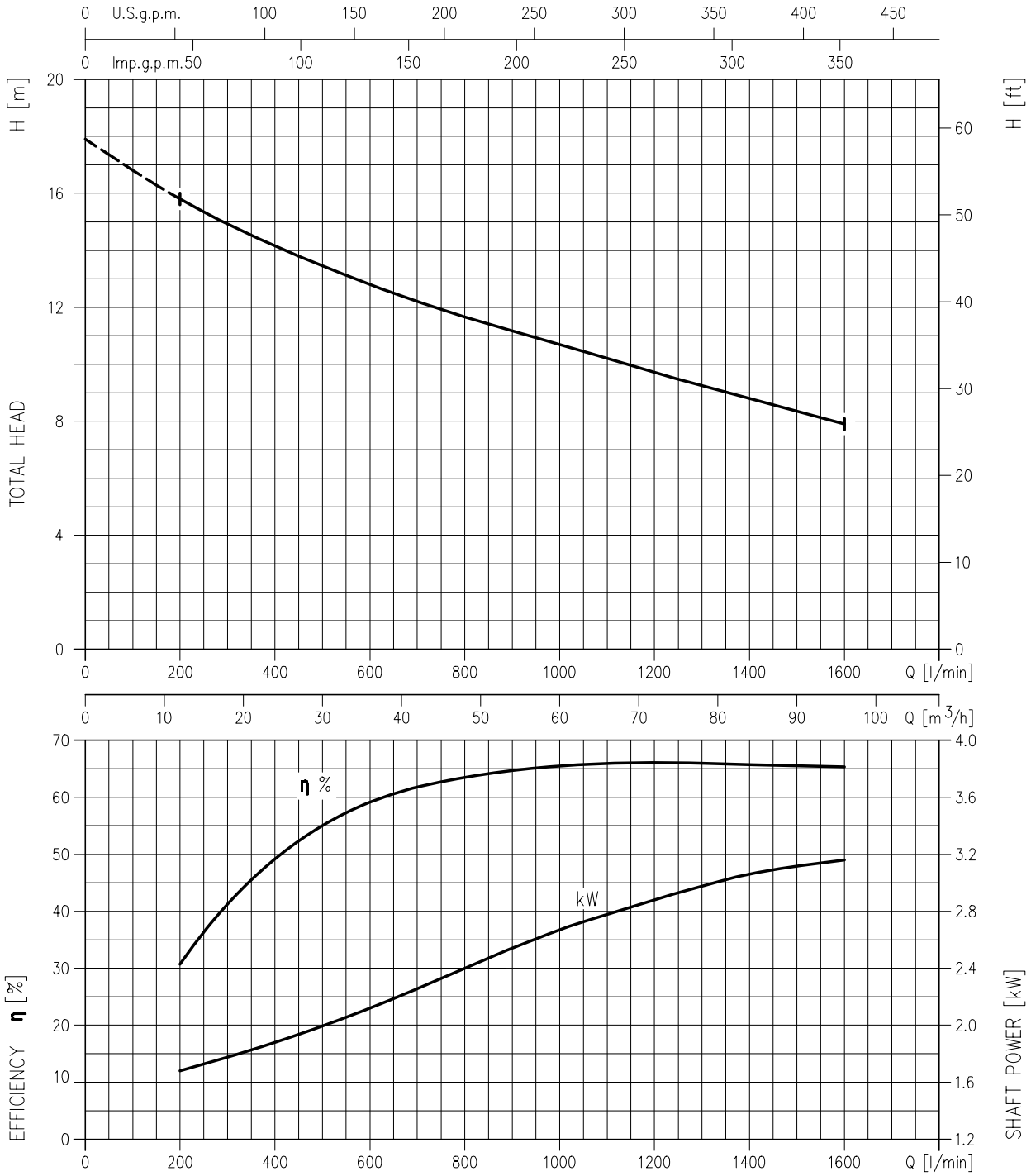

Rotation speed ≈ 1450 min^{-1}

Test standard: ISO 9906 – Annex A

PERFORMANCE CURVE

50 Hz

Rev. E

100DML53.7 (3.7 kW)

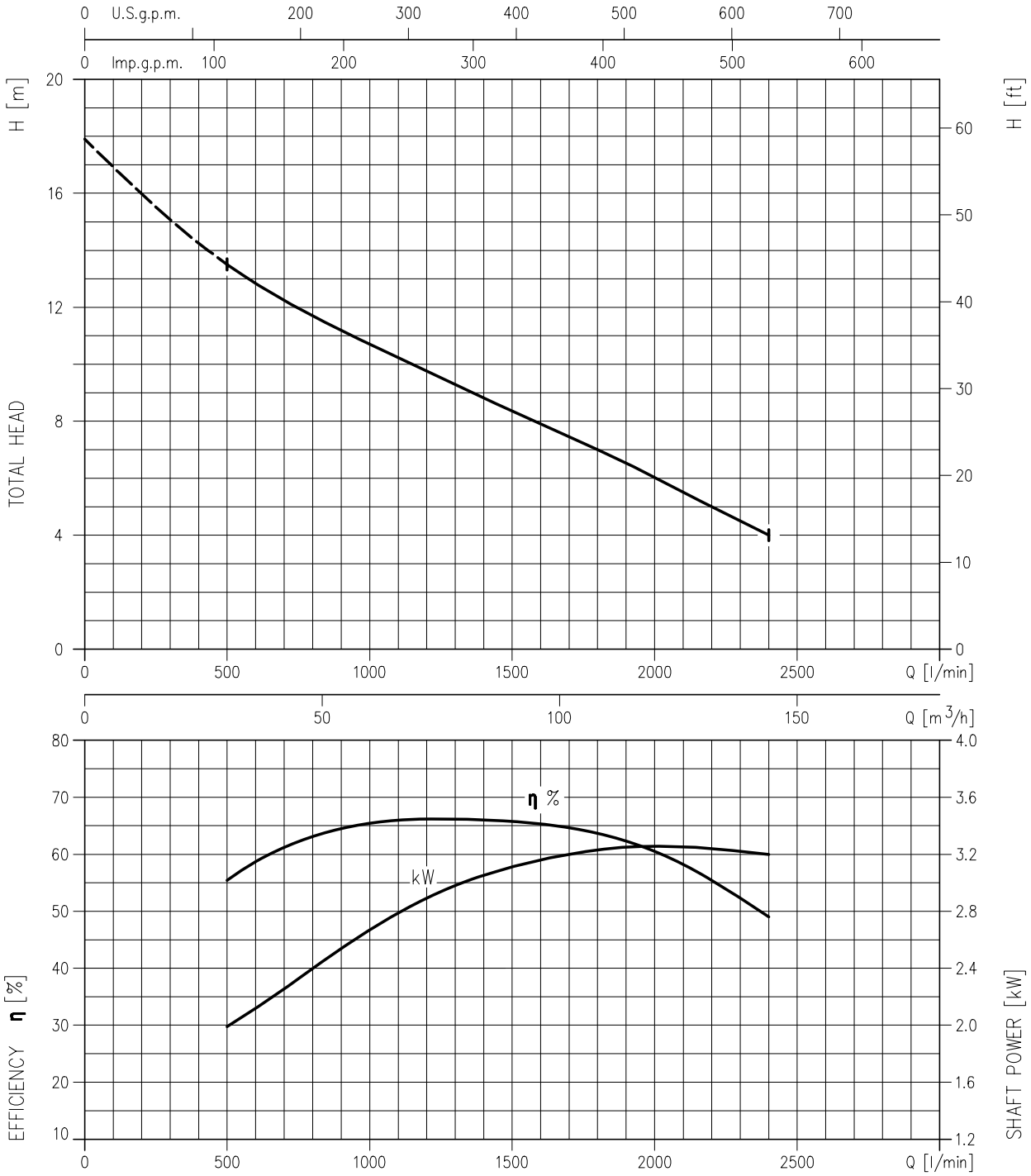

Rotation speed ≈ 1450 min^{-1}

Test standard: ISO 9906 – Annex A

PERFORMANCE CURVE

50 Hz

Rev. E

100DML55.5 (5.5 kW)

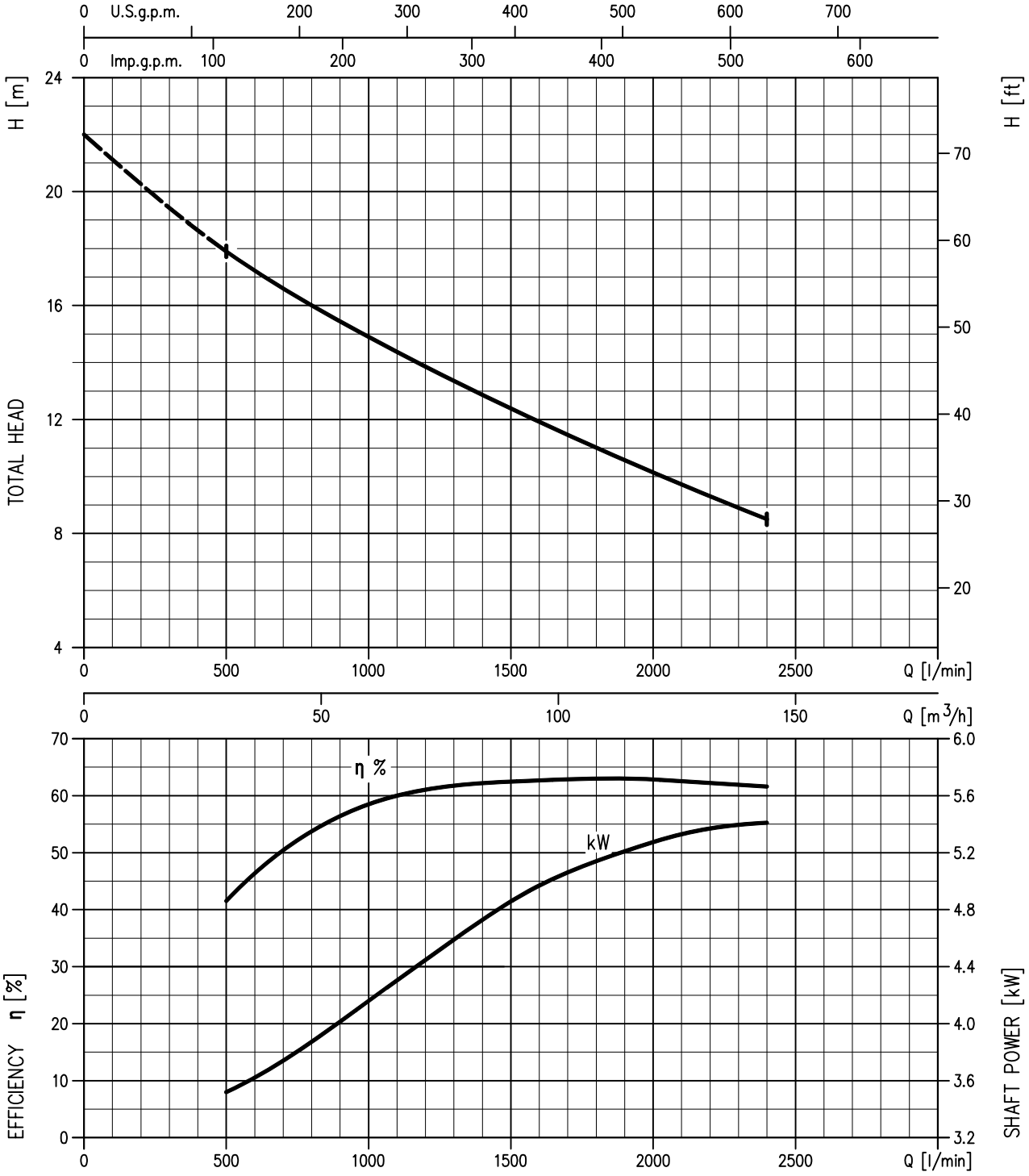

Rotation speed ≈ 1450 min^{-1}

Test standard: ISO 9906 – Annex A

PERFORMANCE CURVE

50 Hz

Rev. E

100DML57.5 (7.5 kW)

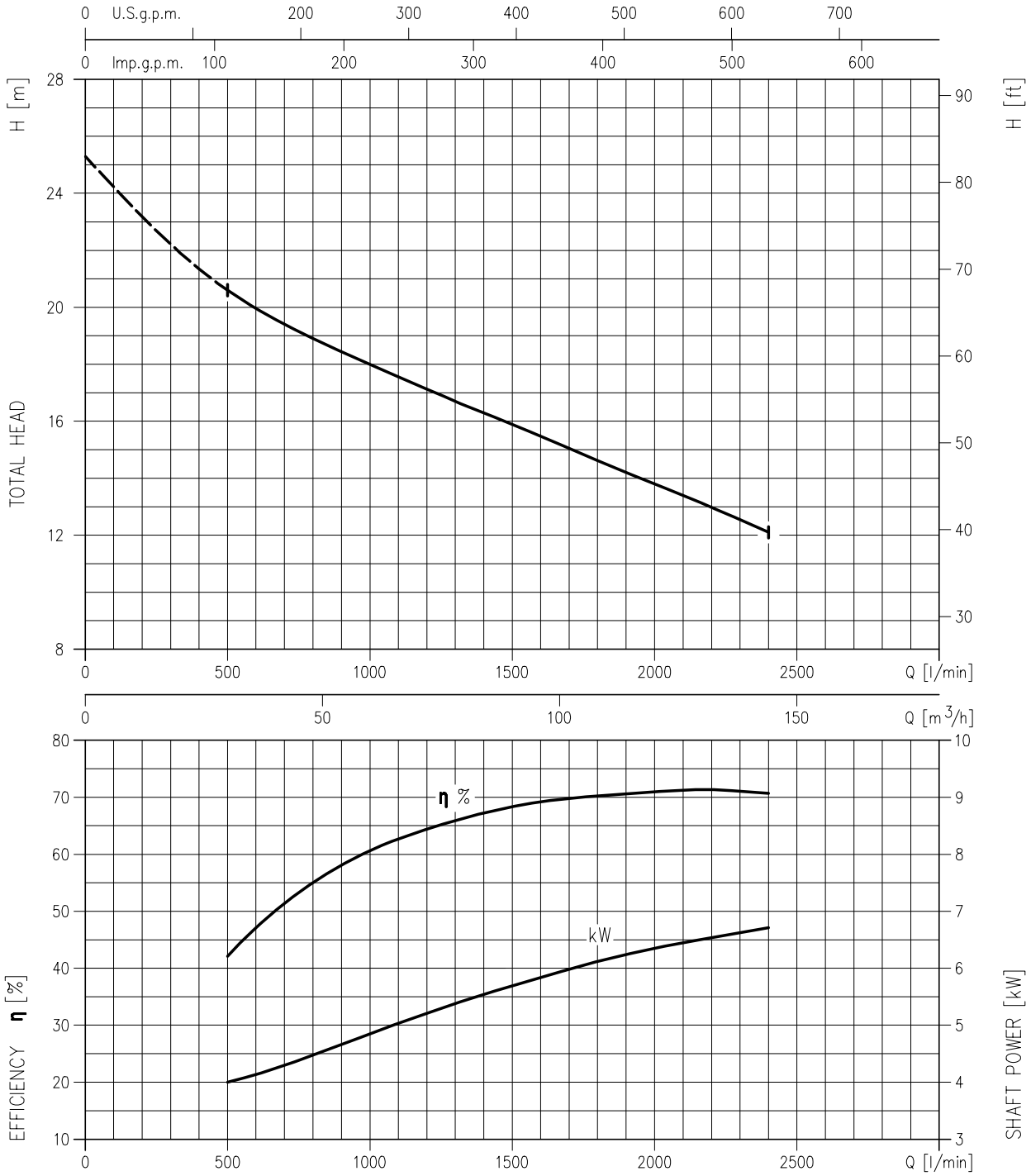

Rotation speed ≈ 1450 min^{-1}

Test standard: ISO 9906 – Annex A

PERFORMANCE CURVE

50 Hz

Rev. E

100DML511 (11 kW)

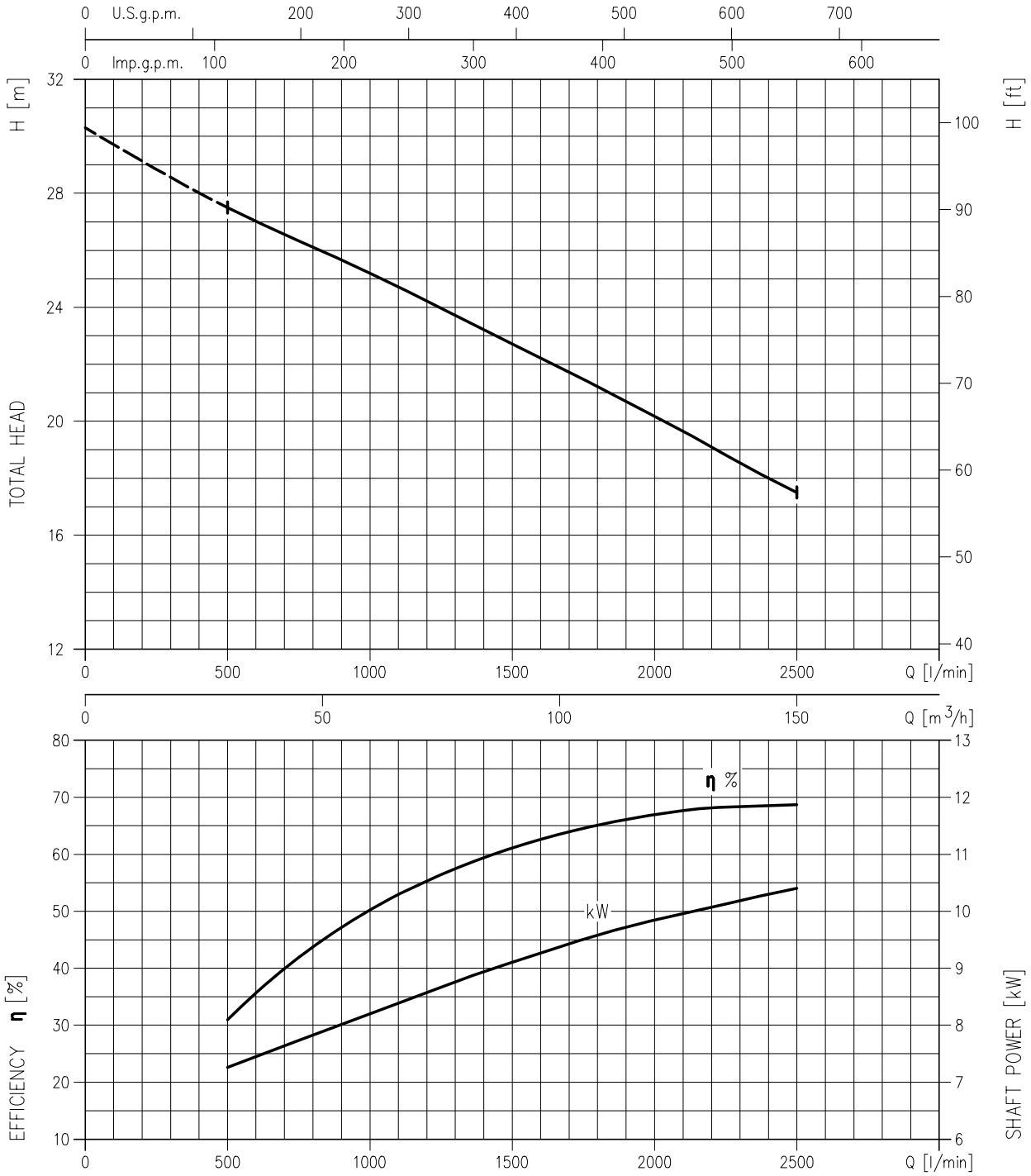

Rotation speed ≈ 1450 min^{-1}

Test standard: ISO 9906 – Annex A

PERFORMANCE CURVE

50 Hz

Rev. E

100DML515 (15 kW)

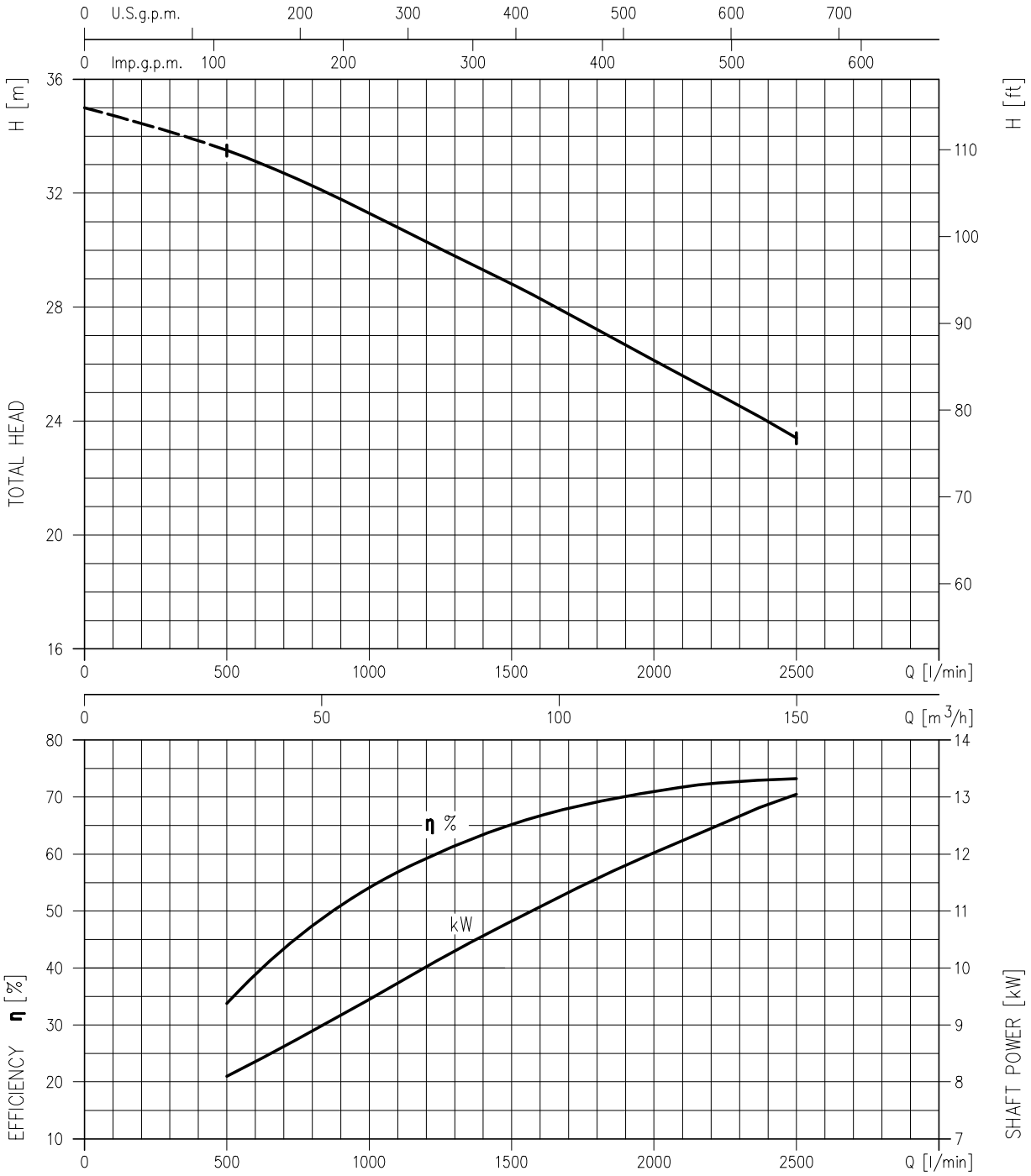

Rotation speed ≈ 1450 min^{-1}

Test standard: ISO 9906 – Annex A

PERFORMANCE CURVE

50 Hz

Rev. E

100DML522 (22 kW)

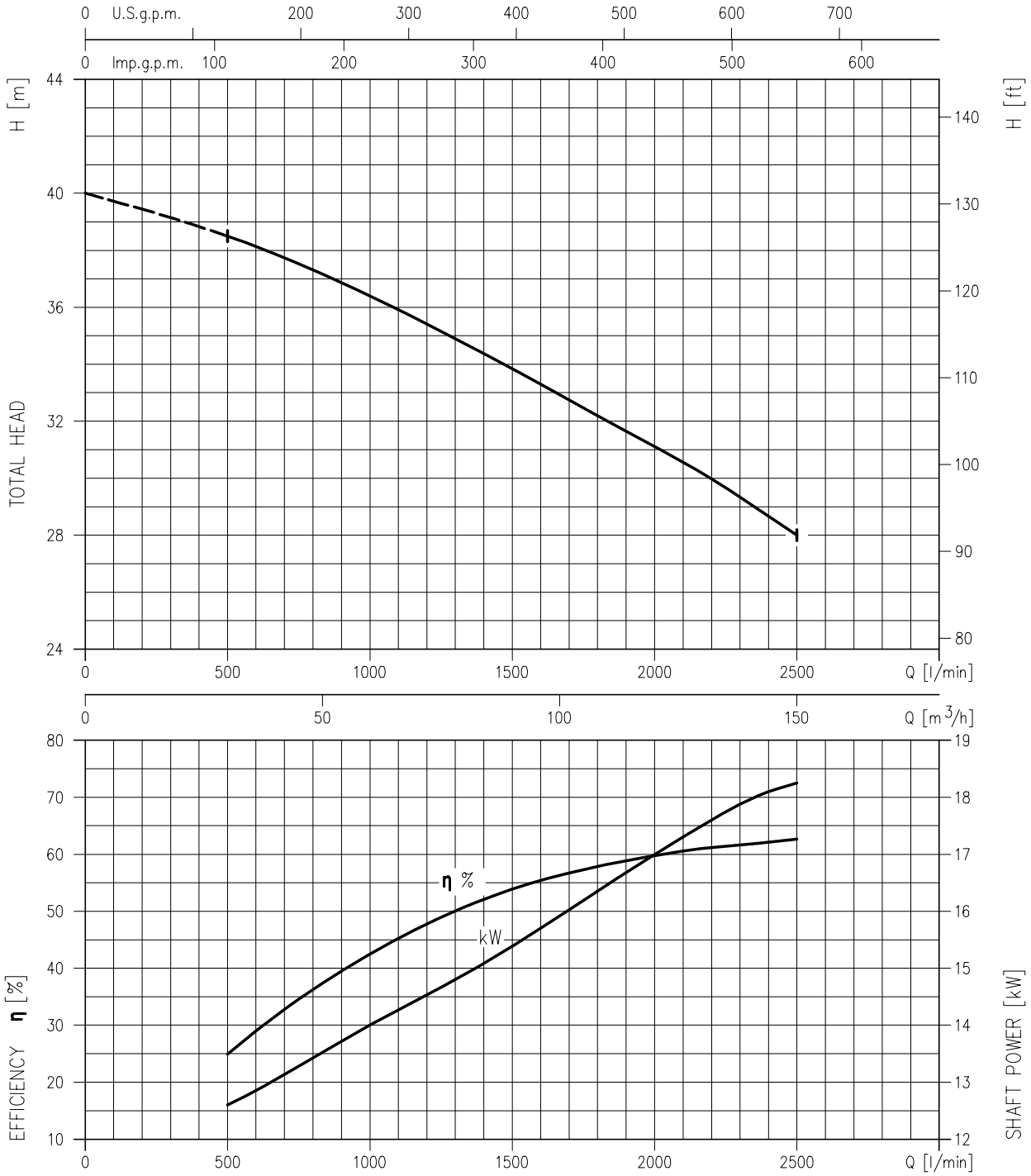

Rotation speed ≈ 1450 min^{-1}

Test standard: ISO 9906 – Annex A

PERFORMANCE CURVE

50 Hz

Rev. E

150DML55.5 (5.5 kW)

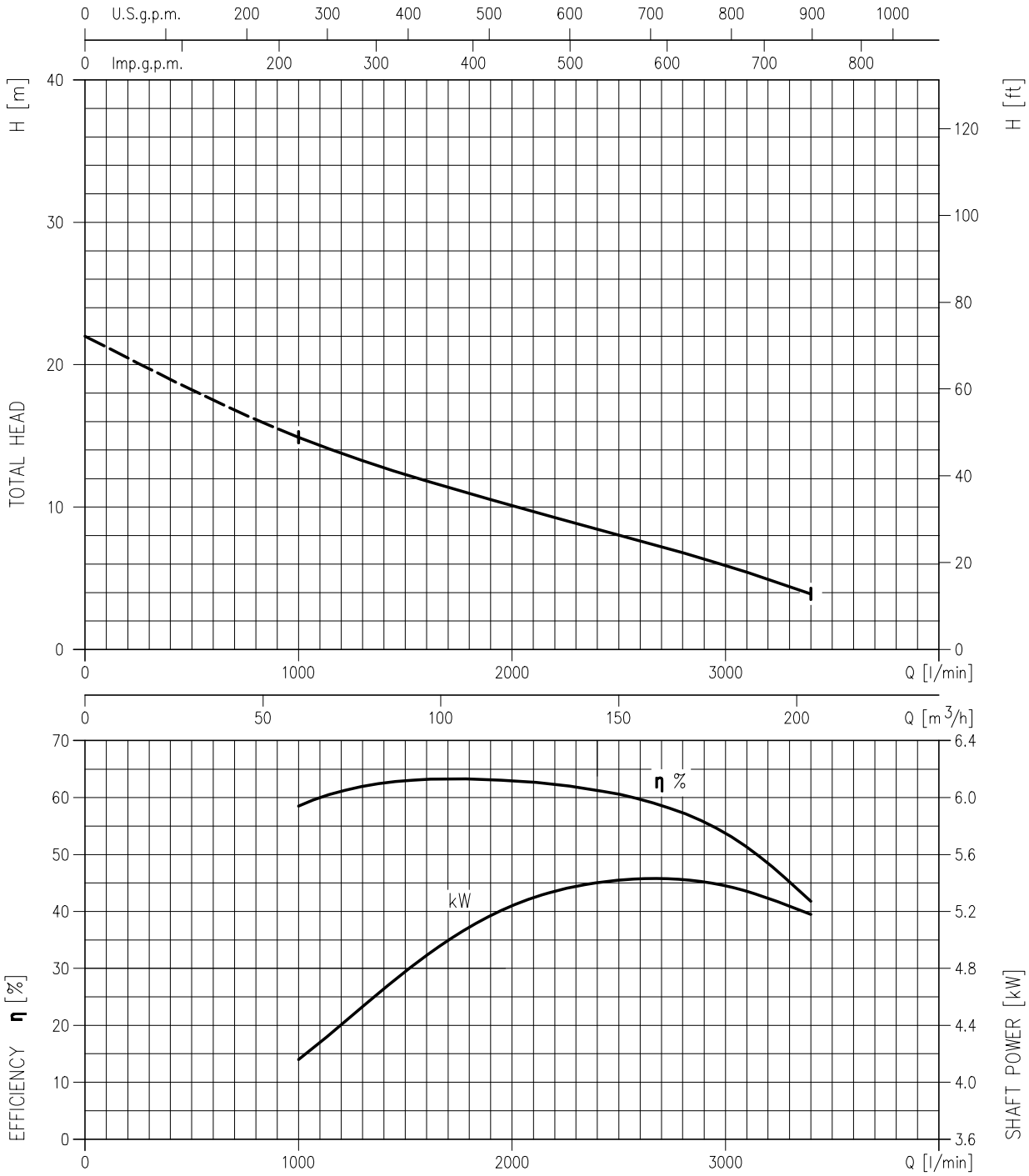

Rotation speed ≈ 1450 min^{-1}

Test standard: ISO 9906 – Annex A

PERFORMANCE CURVE

50 Hz

Rev. E

150DML57.5 (7.5 kW)

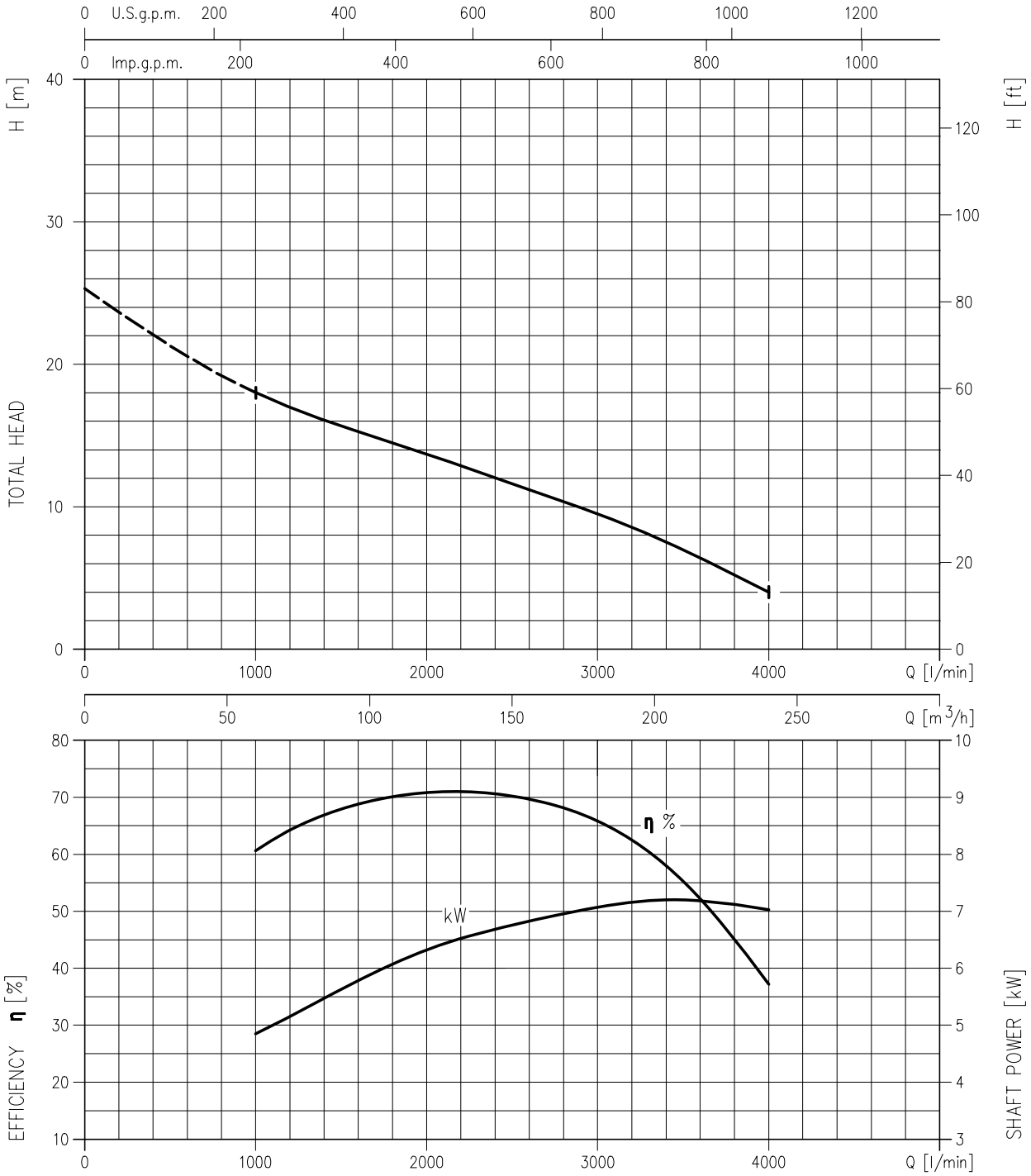

Rotation speed ≈ 1450 min^{-1}

Test standard: ISO 9906 – Annex A

PERFORMANCE CURVE

50 Hz

Rev. E

150DML511 (11 kW)

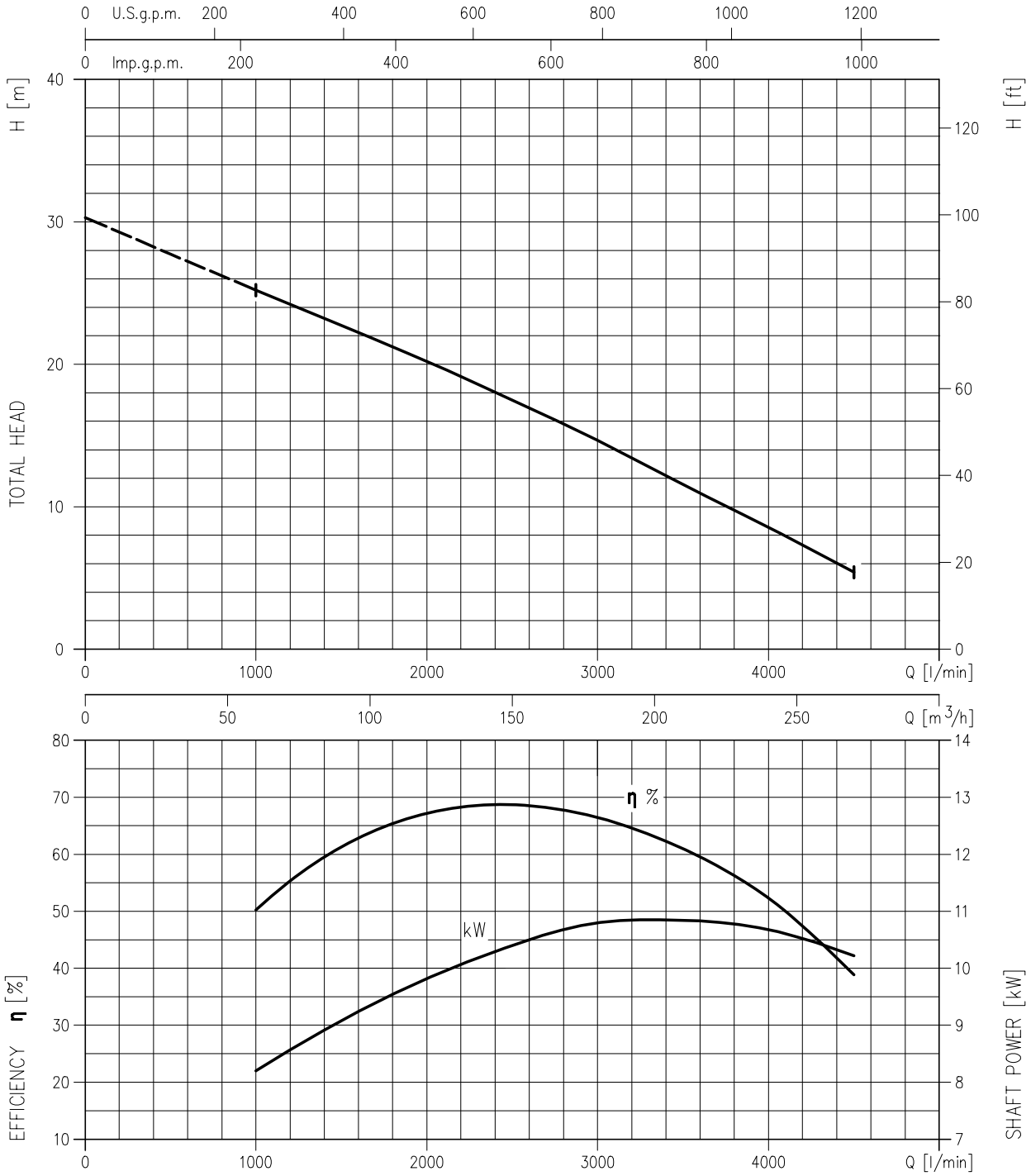

Rotation speed ≈ 1450 min^{-1}

Test standard: ISO 9906 – Annex A

PERFORMANCE CURVE

50 Hz

Rev. E

150DML515 (15 kW)

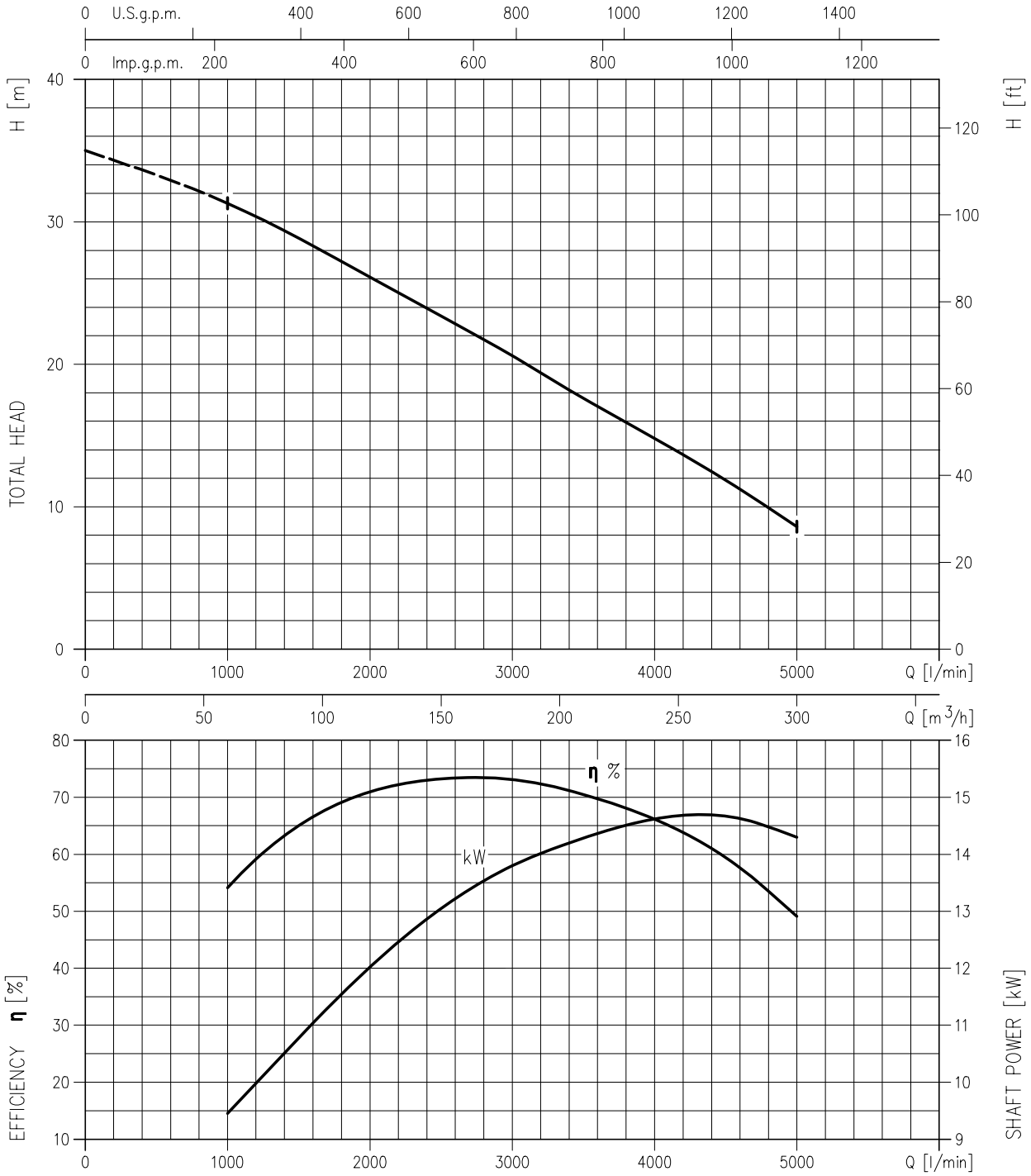

Rotation speed ≈ 1450 min^{-1}

Test standard: ISO 9906 – Annex A

PERFORMANCE CURVE

50 Hz

Rev. E

150DML522 (22 kW)

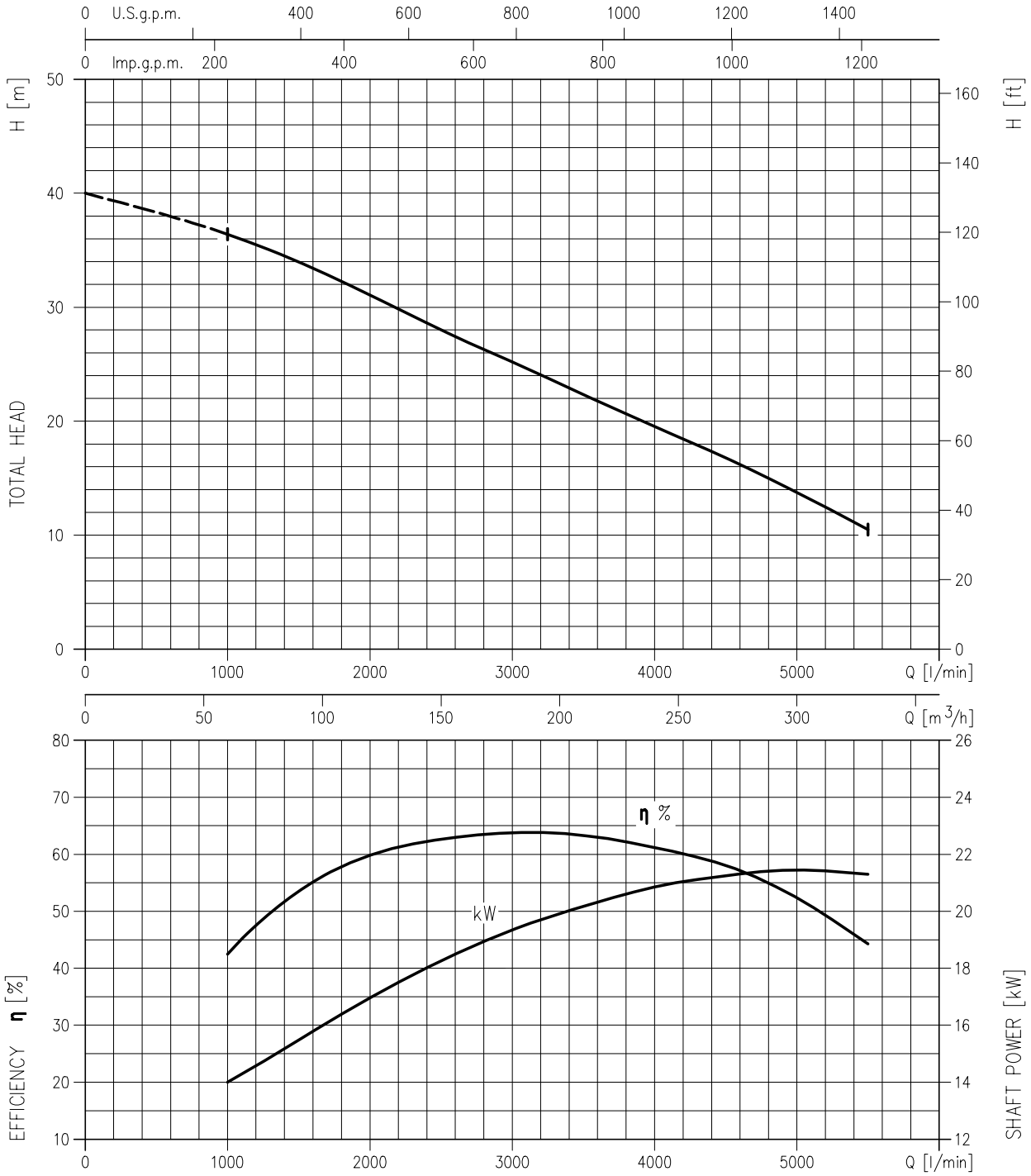

Rotation speed ≈ 1450 min^{-1}

Test standard: ISO 9906 – Annex A

PERFORMANCE CURVE

50 Hz

Rev. E

80DMLV52.2 (2.2 kW)

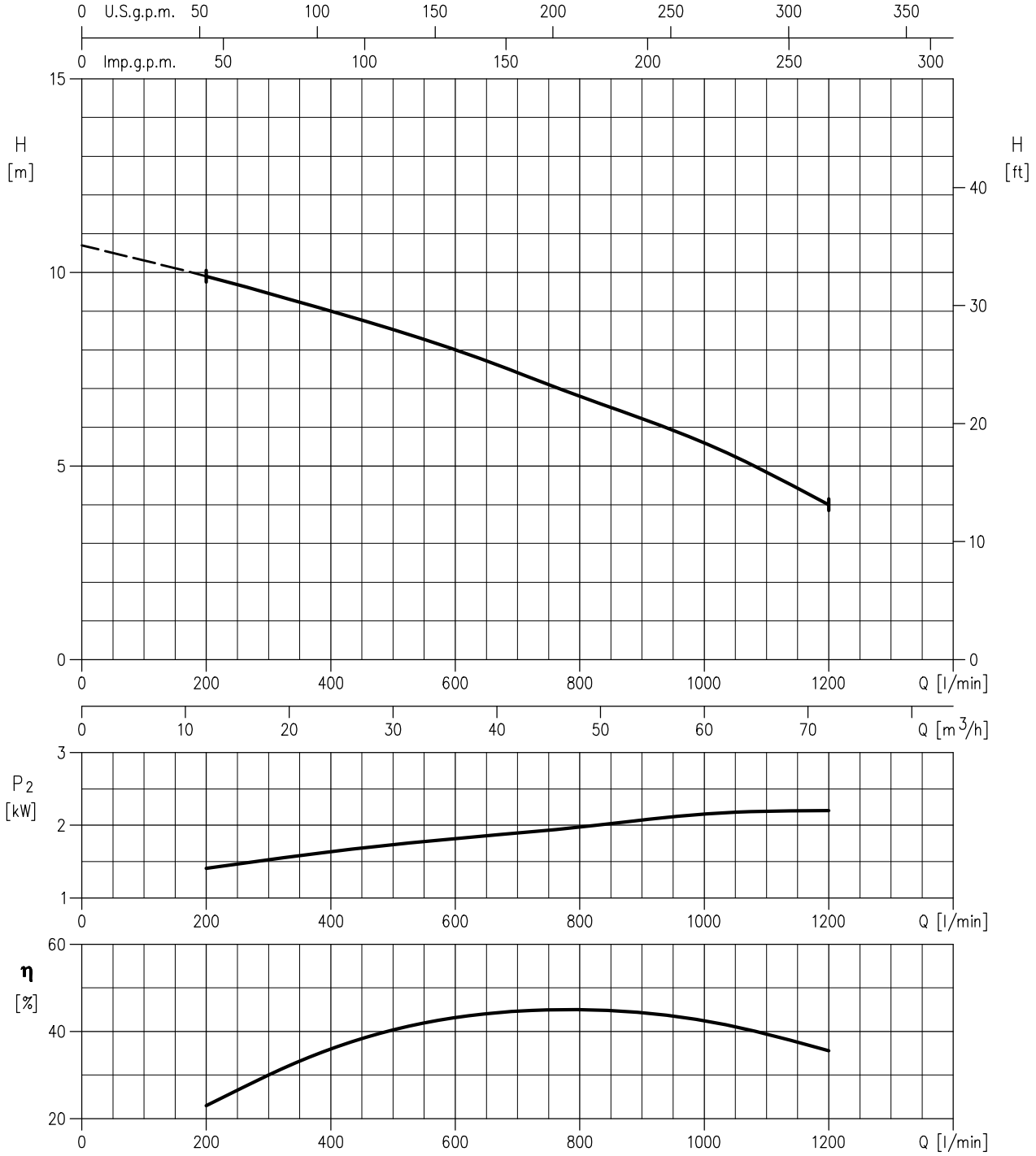

Rotation speed ≈ 1450 min^{-1}

Test standard: ISO 9906 – Annex A

PERFORMANCE CURVE

50 Hz

Rev. E

80DMLV53.7 (3.7 kW)

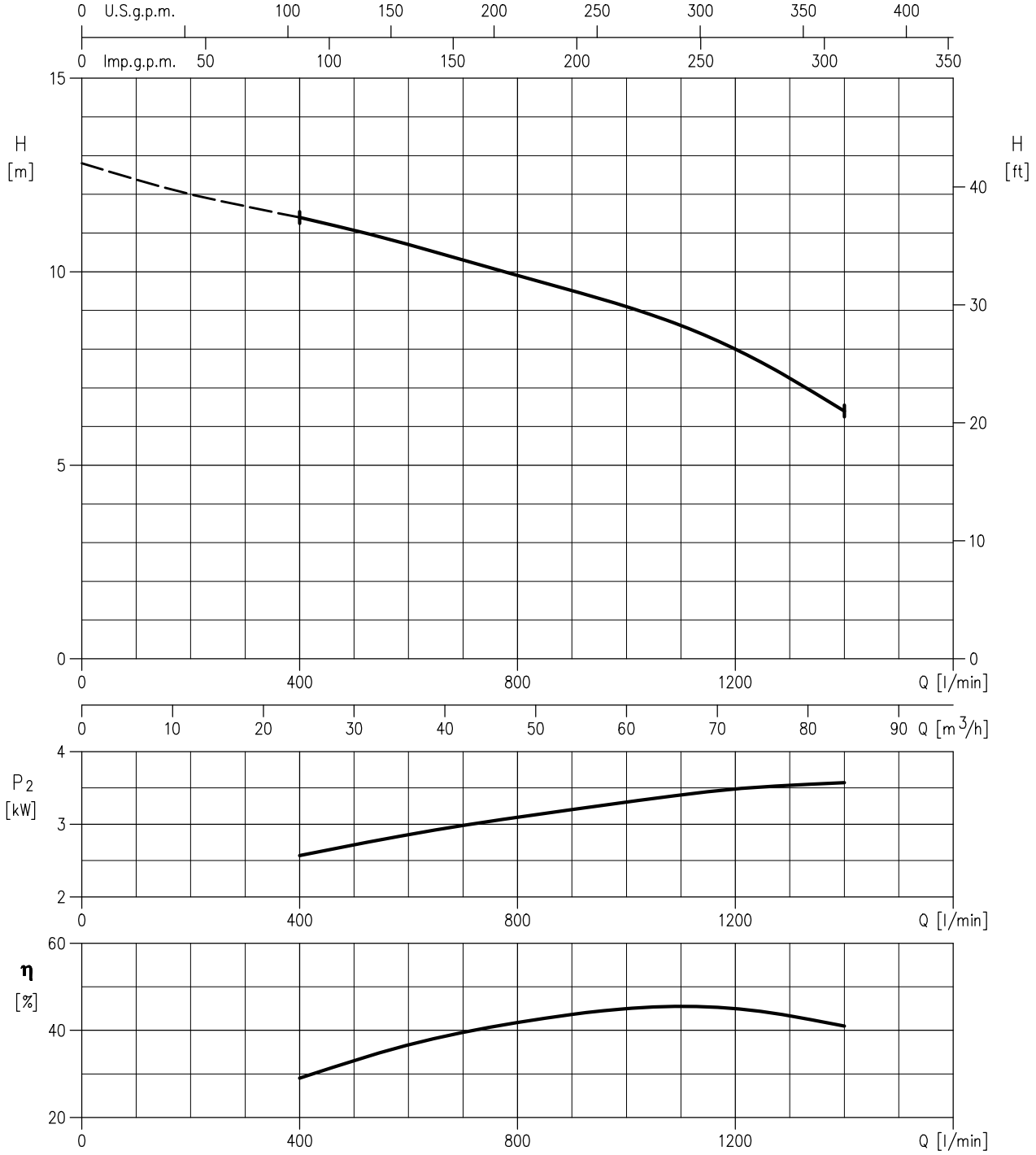

Rotation speed ≈ 1450 min^{-1}

Test standard: ISO 9906 – Annex A

PERFORMANCE CURVE

50 Hz

Rev. E

100DMLV55.5 (5.5 kW)

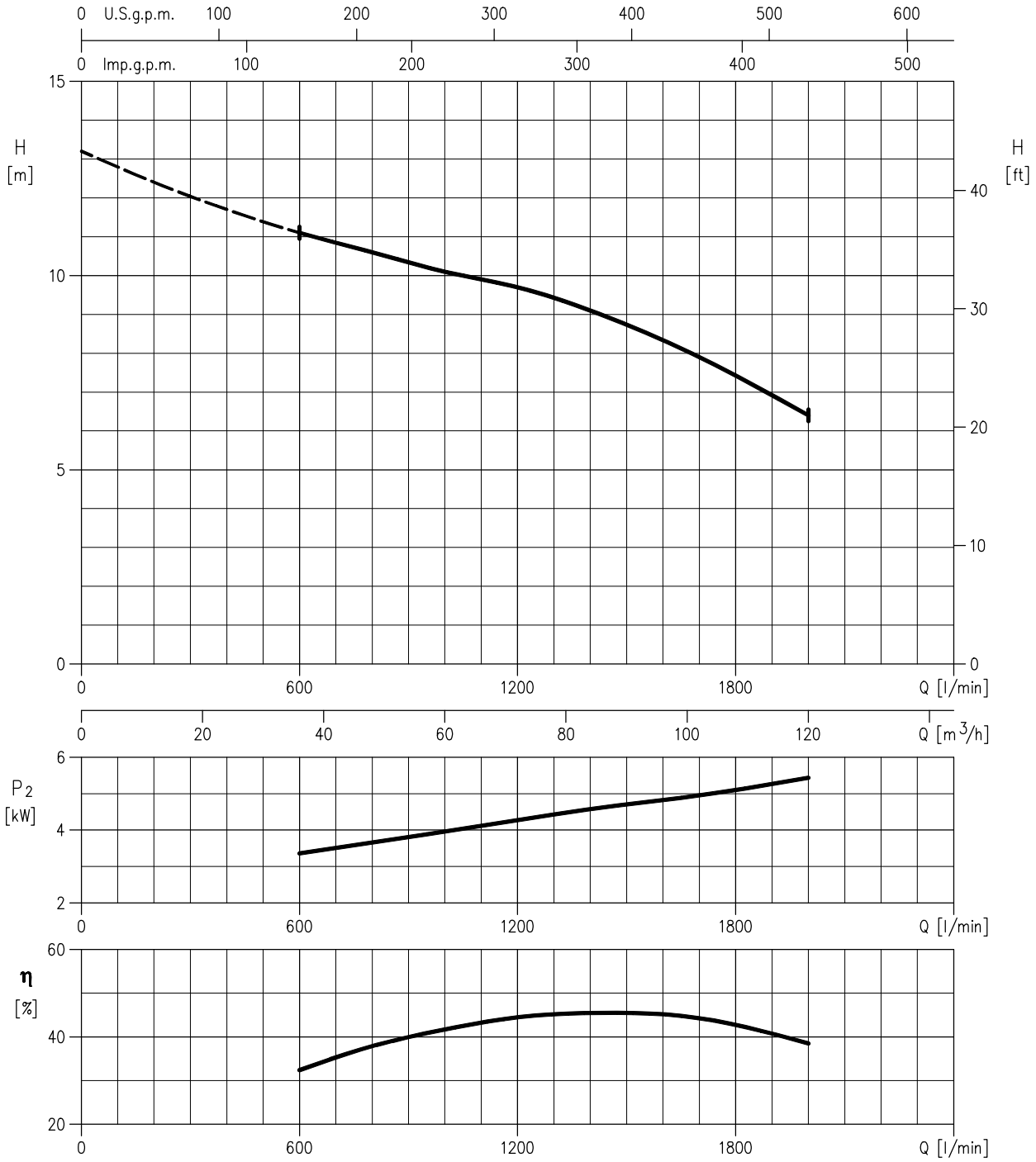

Rotation speed ≈ 1450 min^{-1}

Test standard: ISO 9906 – Annex A

PERFORMANCE CURVE

50 Hz

Rev. E

100DMLV57.5 (7.5 kW)

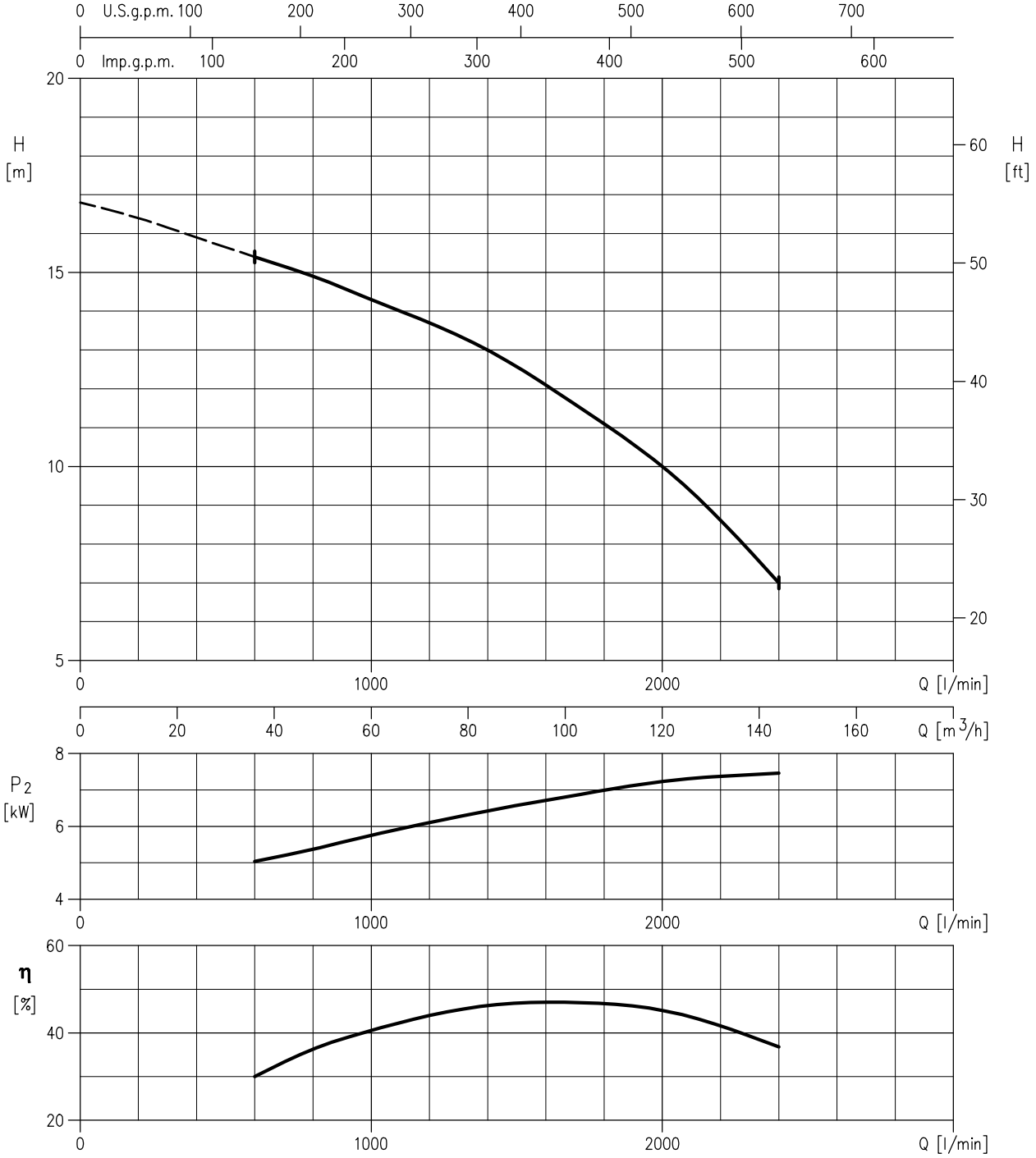

Rotation speed ≈ 1450 min^{-1}

Test standard: ISO 9906 – Annex A

PERFORMANCE CURVE

50 Hz

Rev. E

100DMLV511 (11 kW)

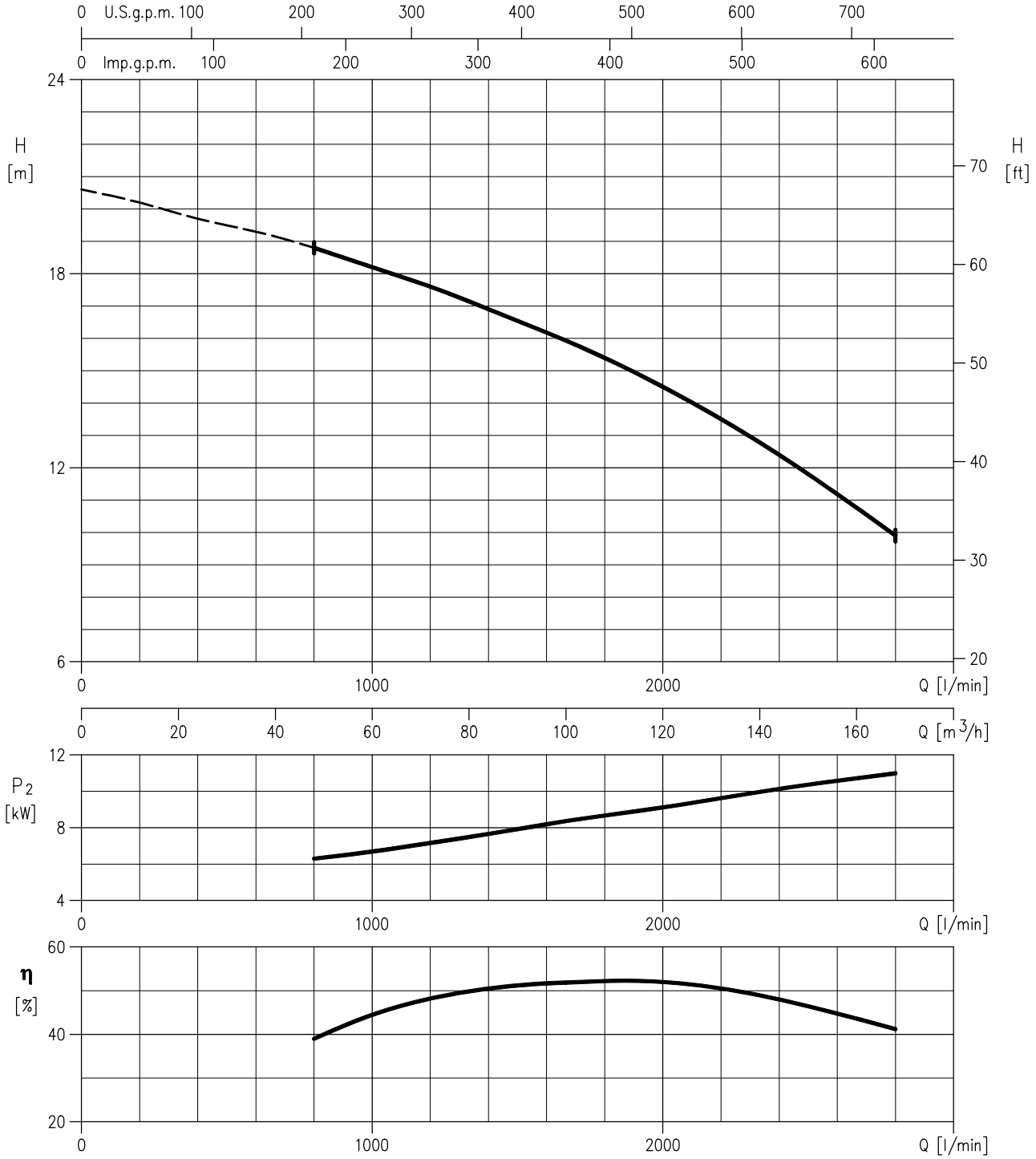

Rotation speed ≈ 1450 min^{-1}

Test standard: ISO 9906 – Annex A

PERFORMANCE CURVE

50 Hz

Rev. E

100DMLV515 (15 kW)

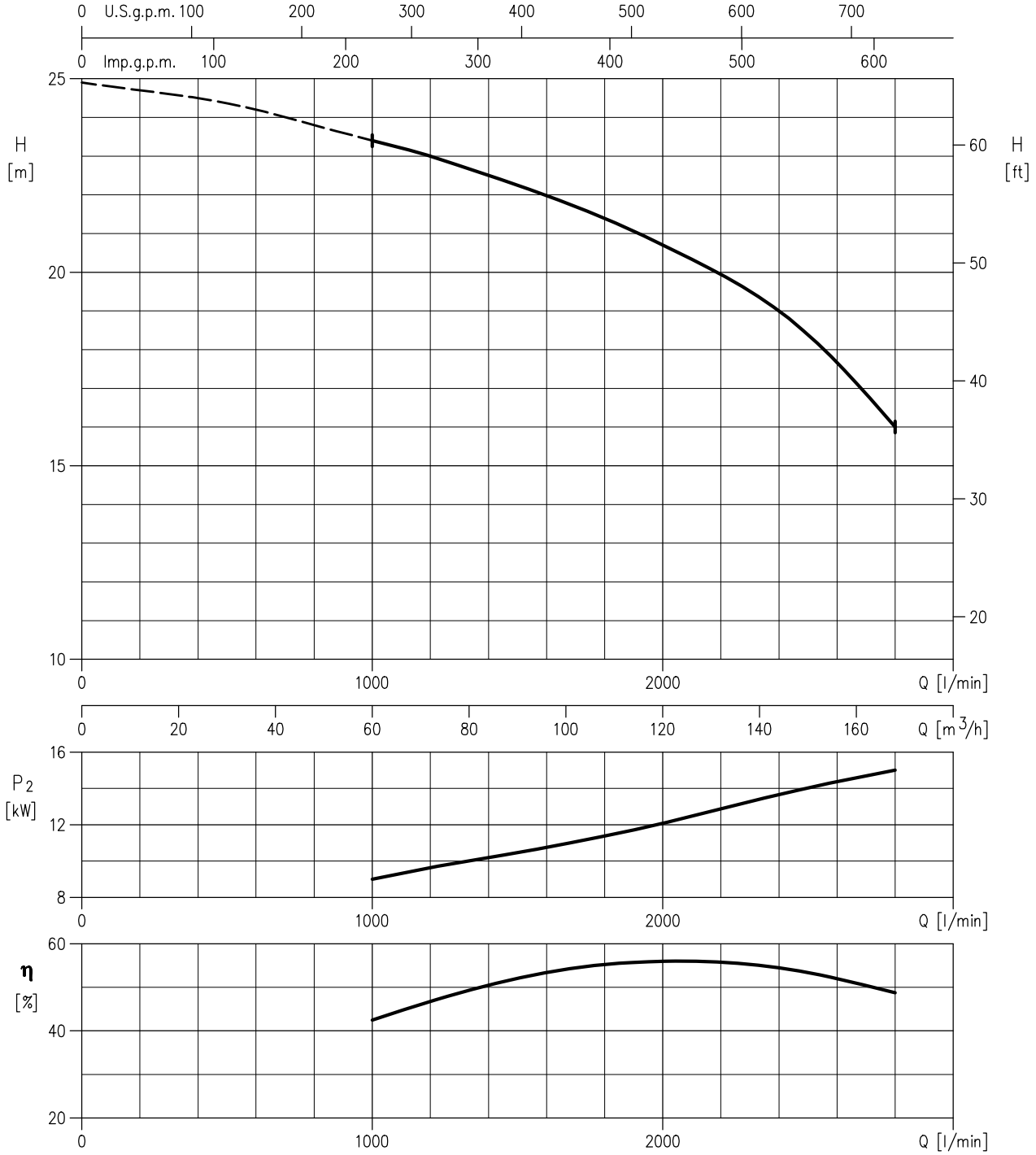

Rotation speed ≈ 1450 min^{-1}

Test standard: ISO 9906 – Annex A

PERFORMANCE CURVE

50 Hz

Rev. E

100DMLV522 (22 kW)

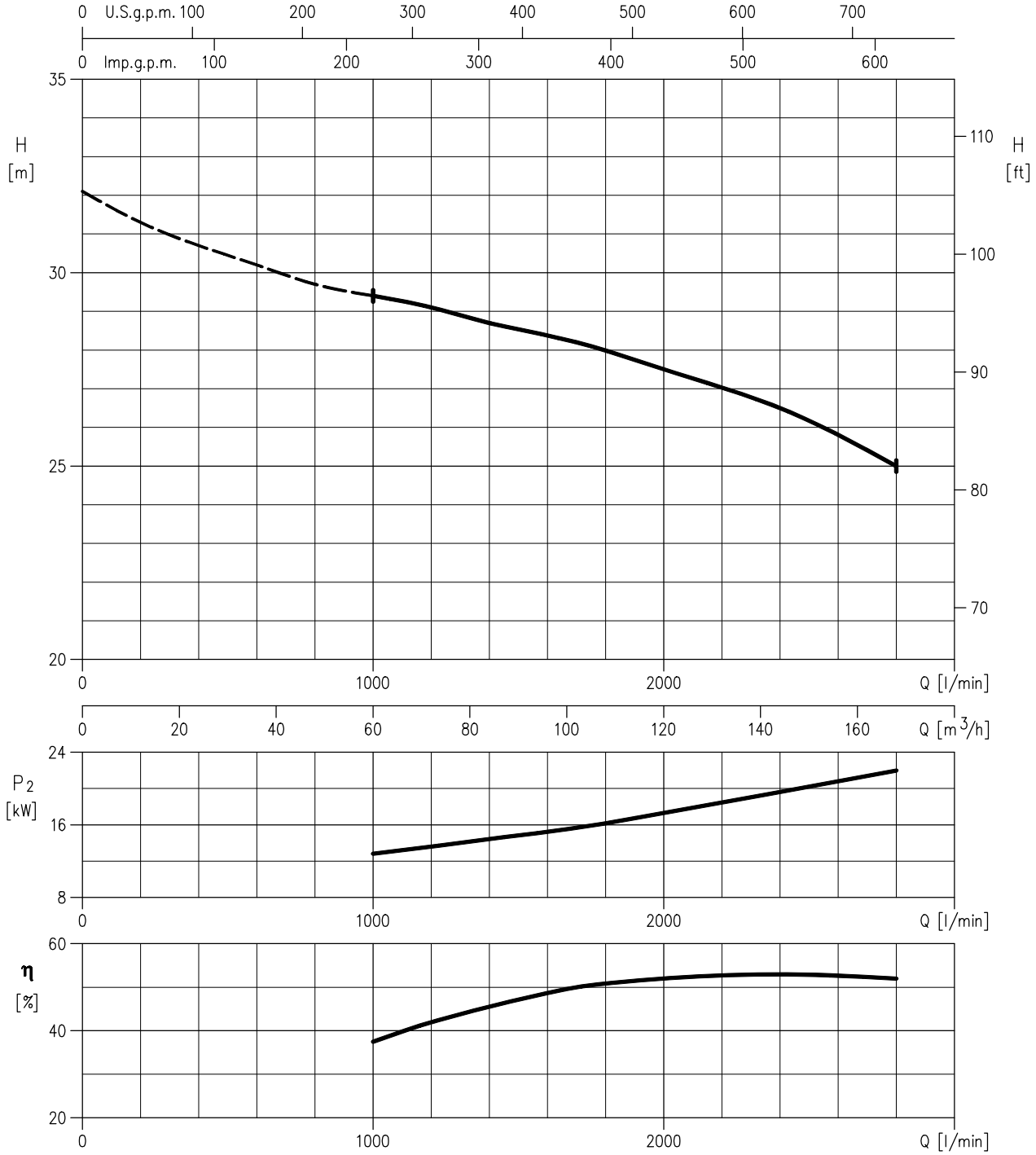

Rotation speed ≈ 1450 min^{-1}

Test standard: ISO 9906 – Annex A

DIMENSIONS AND WEIGHT

50 Hz

Rev. E

50DS

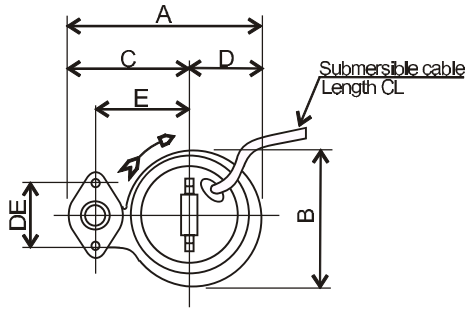

Figure 1

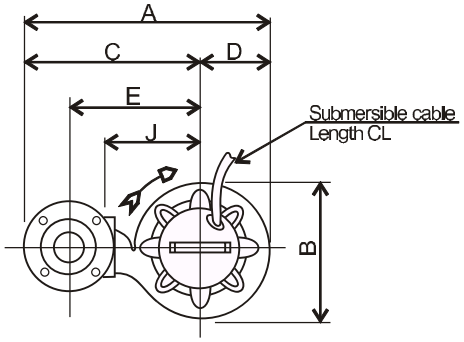

Figure 2

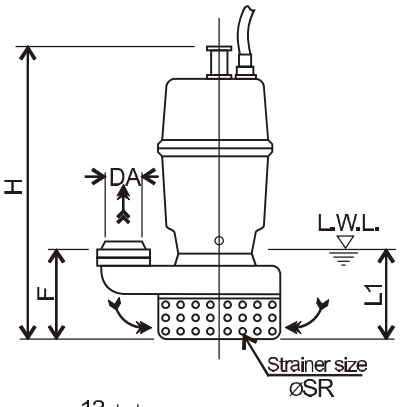

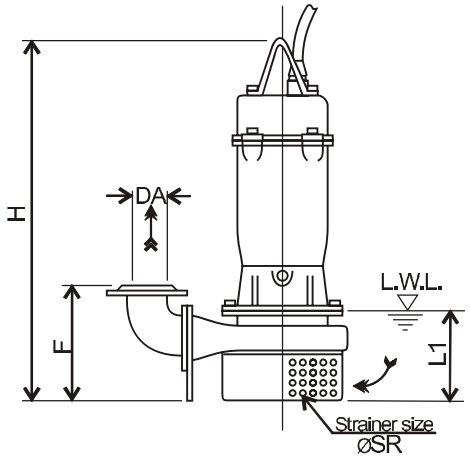

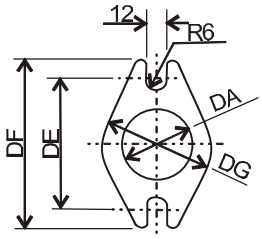

Oval Flange

Discharge flange dimensions [mm] - EN 1092-2							
Type	DA	DE	DF	DG	DT	DN	DD
Oval	50	96	114	76	-	-	-
Round		125	165	99	17	4	19
	65	145	185	118			
	80	160	200	132	19	8	
	100	180	220	156	21		

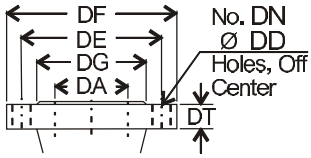

Round Flange

Dimensions [mm]																		
Size DA	Model	Fig.	Flange Type	Output [kW]	DA	A	B	C	D	E	F	H	DE	J	L1 (*)	ØSR	CL [m]	Weight [kg]
50	50DS51.5	1	Oval	1.5	G2"	266	200	168	98	130	115	450	96	-	120	10	6	25
	50DS52.2	2	Round	2.2	50	433	245	313	120	235	198	619	-	180	160		10	55
	50DS53.7			3.7														61
65	65DS51.5			1.5	65	407	210	303	104	215	197	503	-	150	120		6	35
80	80DS52.2			2.2	80	503	268	368	135	275	215	625	-	200	160		10	59
	80DS53.7			3.7														64
100	100DS55.5			5.5	100	615	309	460	155	355	257	730	-	250	200	13		92
	100DS57.5			7.5														104

(*)
- L.W.L (Low Water Level)
- Operation is limited to 10 minutes at L.W.L.
- Operation is limited to 30 minutes with water level below top of motor

DIMENSIONS AND WEIGHT

50 Hz

Rev. E

DS with QDC (1.5÷3.7 kW)

Figure 1

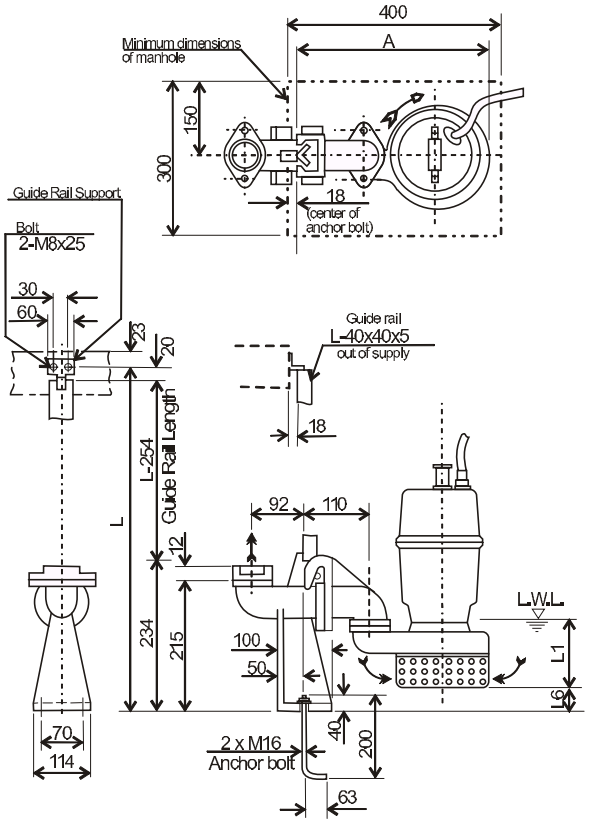

Figure 2

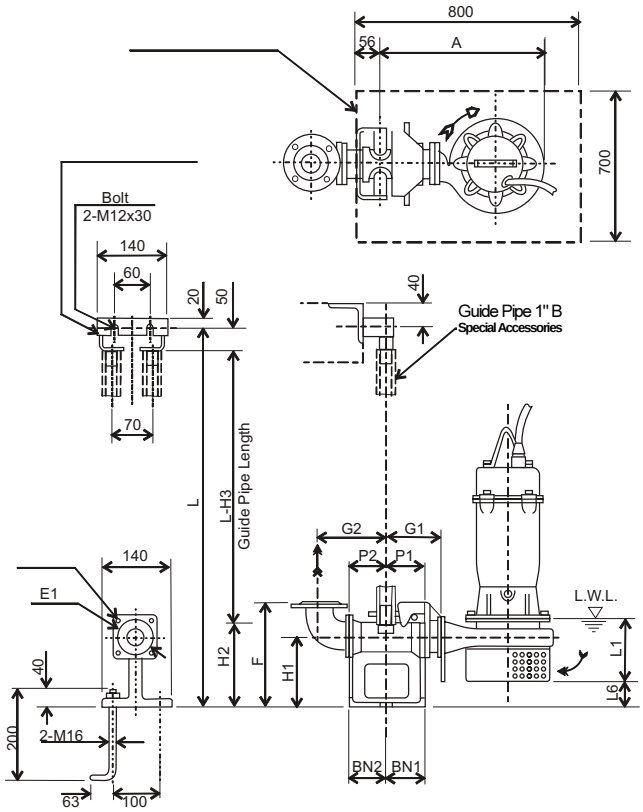

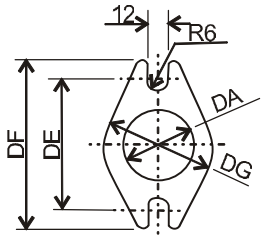

Oval Flange

Discharge flange dimensions [mm] - EN 1092-2							
Type	DA	DE	DF	DG	DT	DN	DD
Oval	50	96	114	76	-	-	-
Round		125	165	99	17	4	19
	65	145	185	118			
	80	160	200	132	19	8	

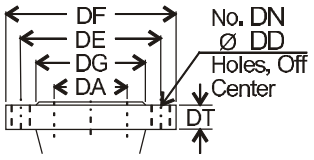

Round Flange

Dimensions [mm]																						
Size DA	Model	Fig.	Flange Type	Output [kW]	DA	A	P1	P2	G1	G2	F	H1	H2	H3	L1 (*)	L6	BN1	BN2	D1	E1	QDC Model	QDC Weight [kg]
50	50DS51.5	1	Oval	1.5	G2"	-	-	-	-	-	-	-	-	-	120	25	-	-	-	-	LS50	9
	50DS52.2	2	Round	2.2	50	415	75	80	115	135	230	135	165	215	160	32	75	80	12	120	LM50	11
	50DS53.7			3.7																		
65	65DS51.5			1.5	65	374	75	95	120	160	250	145	190	240	120	53		95	12	140	LM65	14
80	80DS52.2			2.2	80	460	75	90	125	165	285	175	230	280	160	70		90	15	155	LM80	17
	80DS53.7			3.7																		

(*)
- L.W.L (Low Water Level)
- Operation is limited to 10 minutes at L.W.L.
- Operation is limited to 30 minutes with water level below top of motor

DIMENSIONS AND WEIGHT

50 Hz

Rev. E

DS (5.5÷7.5 kW) with QDC

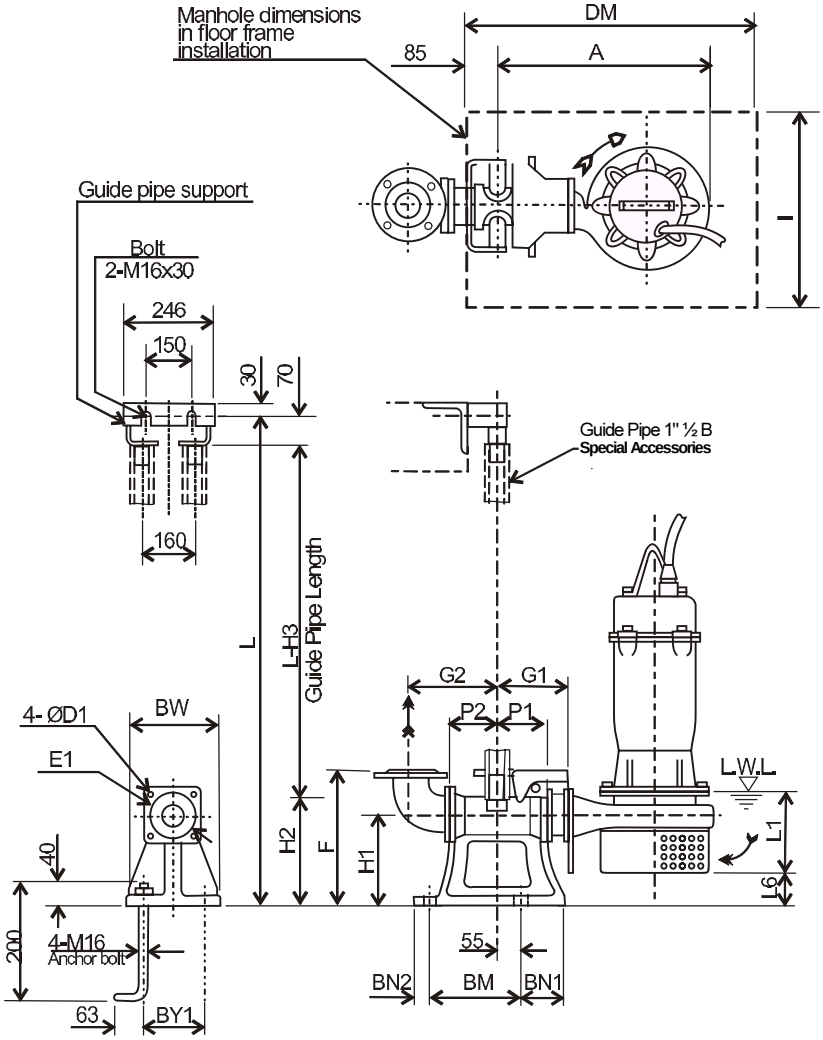

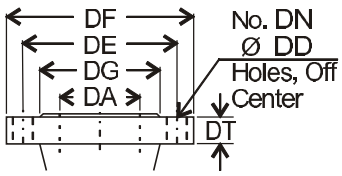

Discharge flange dimensions [mm] - EN 1092-2							
Type	DA	DE	DF	DG	DT	DN	DD
Round	100	180	220	156	21	8	19

Dimensions [mm]																								
Size DA	Model	Output [kW]	A	P1	P2	G1	G2	F	H1	H2	H3	L1 (*)	L6	BN1	BN2	BM	BY1	BW	DM	I	D1	E1	QDC Model	QDC Weight [kg]
100	100DS55.5	5.5	590	105	105	185	210	365	240	265	335	200	108	100	40	220	180	230	800	700	19	175	LL100	46
	100DS57.5	7.5																						

(*)
- L.W.L (Low Water Level)
- Operation is limited to 10 minutes at L.W.L.
- Operation is limited to 30 minutes with water level below top of motor

DIMENSIONS AND WEIGHT

50 Hz

Rev. E

DVS

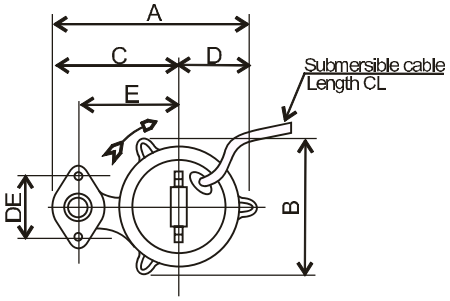

Figure 1

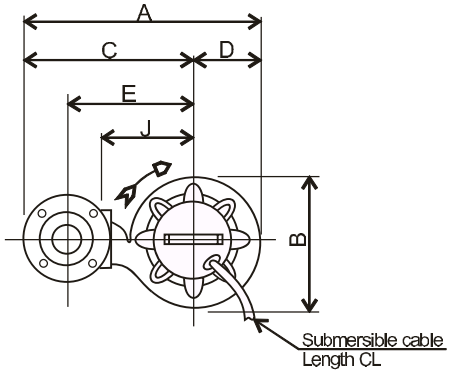

Figure 2

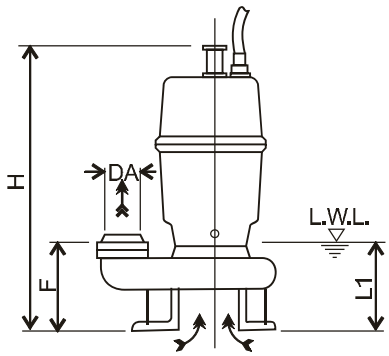

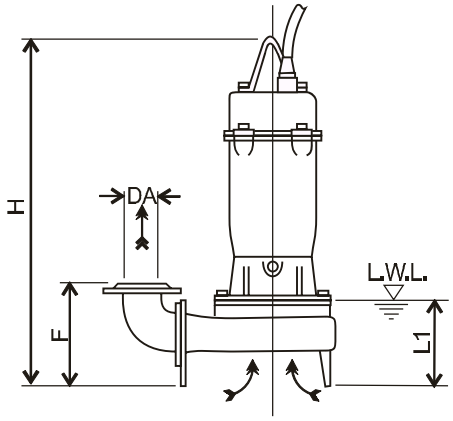

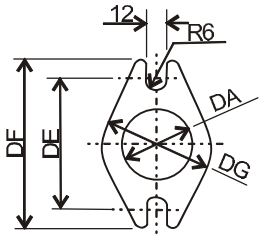

Oval Flange

Discharge flange dimensions [mm] - EN 1092-2							
Type	DA	DE	DF	DG	DT	DN	DD
Oval	50	96	114	76	-	-	-
Round	65	145	185	118	17	4	19
	80	160	200	132	19	8	

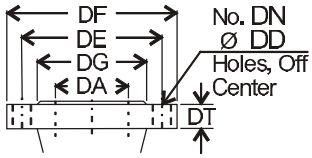

Round Flange

Dimensions [mm]																	
Size DA	Model	Fig.	Flange Type	Output [kW]	DA	A	B	C	D	E	F	H	DE	J	L1 (*)	CL [m]	Weight [kg]
50	50DVS51.5	1	Oval	1.5	G2"	249	171	163	86	125	82	439	96	-	105	6	27
65	65DVS51.5	2	Round	1.5	65	396	195	298	98	210	178	519	-	145	125		34
	65DVS52.2			2.2		427	227	313	114	225	201	643		160	155	10	50
	65DVS53.7			3.7													59
80	80DVS51.5			1.5	80	411	195		98	220	183	519		145	125	6	35
	80DVS52.2			2.2		442	227	328	114	235	206	643		160	155	10	51
	80DVS53.7			3.7													60

(*)
- L.W.L (Low Water Level)
- Operation is limited to 10 minutes at L.W.L.
- Operation is limited to 30 minutes with water level below top of motor

DIMENSIONS AND WEIGHT

50 Hz

Rev. E

DVS with QDC

Figure 1

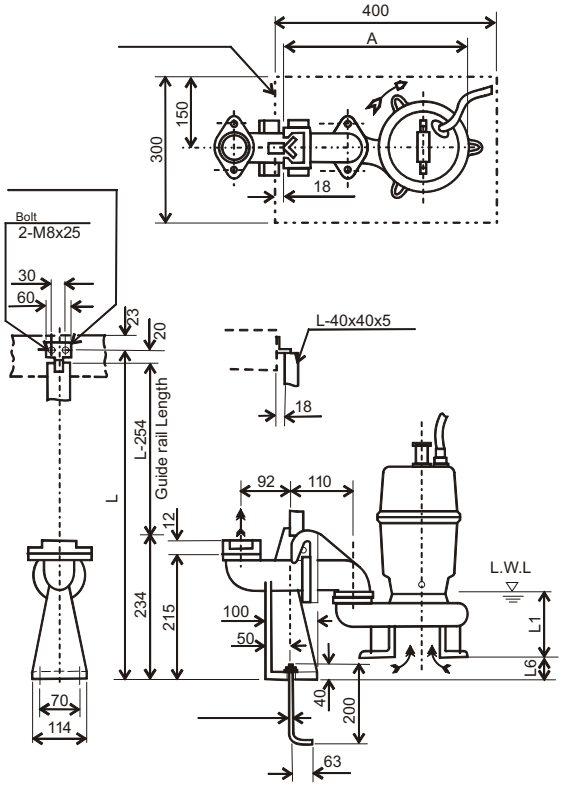

Figure 2

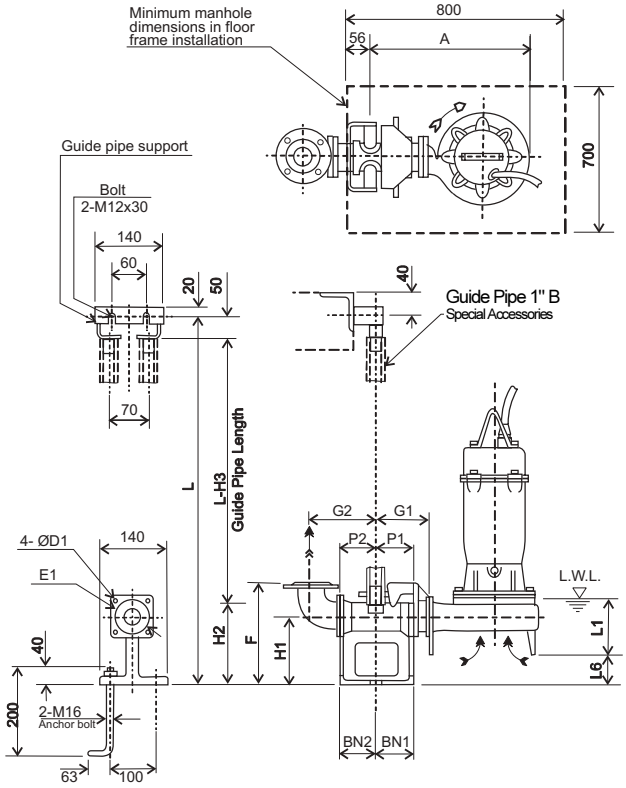

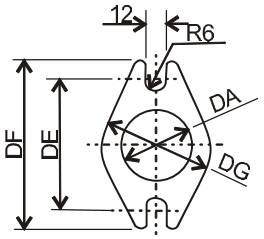

Oval Flange

Discharge flange dimensions [mm] - EN 1092-2							
Type	DA	DE	DF	DG	DT	DN	DD
Oval	50	96	114	76	-	-	-
Round	65	145	185	118	17	4	19
	80	160	200	132	19	8	

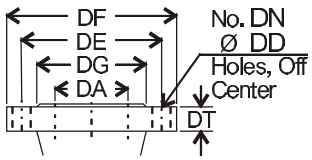

Round Flange

Dimensions [mm]																				
Size DA	Model	Fig.	Flange Type	Output [kW]	A	P1	P2	G1	G2	F	H1	H2	H3	L1 (*)	L6	BN1	BN2	D1	E1	QDC Model	QDC Weight [kg]
50	50DVS51.5	1	Oval	1.5	311	-	-	-	-	-	-	-	-	105	58	-	-	-	-	LS50	9
65	65DVS51.5	2	Round	1.5	363	75	95	120	160	250	145	190	240	125	72	75	95	12	140	LM65	14
	65DVS52.2			2.2	394									155	49						
	65DVS53.7			3.7																	
80	80DVS51.5			1.5	363				170	255	145			125	72						
	80DVS52.2			2.2	394									155	49						
	80DVS53.7			3.7																	

(*)
- L.W.L (Low Water Level)
- Operation is limited to 10 minutes at L.W.L.
- Operation is limited to 30 minutes with water level below top of motor

DIMENSIONS AND WEIGHT

50 Hz

Rev. E

DL

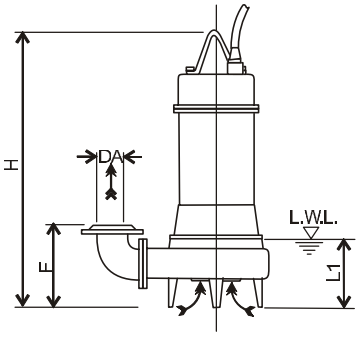

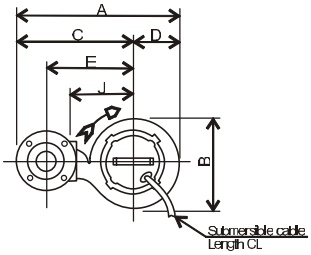

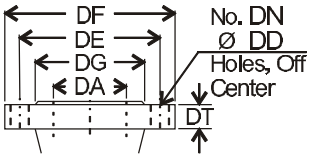

Discharge flange dimensions [mm] - EN 1092-2							
Type	DA	DE	DF	DG	DT	DN	DD
Round	65	145	185	118	17	4	19
	80	160	200	132	19	8	
	100	180	220	156	21		
	150	240	285	211	23		23
	200	295	340	266			
	250	350	395	319	25	12	
	300	400	445	370	24		

Dimensions [mm]													
Size DA	Model	Output [kW]	A	B	C	D	E	F	H	J	L1 (*)	CL [m]	Weight [kg]
65	65DL51.5	1.5	497	291	353	144	265	200	576	200	140	10	52
80	80DL51.5	1.5	524	292	378	146	285	220	597	210	165		55
	80DL52.2	2.2	542	308	388	154	295		654	220			67
	80DL53.7	3.7	567	328	403	164	310		687	235			75
	80DLC55.5	5.5	618	379	428	190	335	307	753	260	205		134
	80DLC57.5	7.5	648	399	448	200	355	305	751	280			148
100	100DL53.7	3.7	614	335	445	169	340	250	706	235	185		79
	100DLB55.5	5.5	646	369	460	186	355	323	768	250	205		123
	100DLC55.5	5.5	660	379	470	190	365	322	753	260			134
	100DLB57.5	7.5	673	385	480	193	375	323	760	270			141
	100DLC57.5	7.5	690	399	490	200	385	320	751	280			148
	100DL511	11	701	402	500	201	395	323	859	290			180
	100DL515	15	741	441	520	221	415	330	954	310			230
	100DL518.5	18.5							958				285
150	150DL55.5	5.5	750	398	550	200	410	381	799	280	245		146
	150DL57.5	7.5	780	418	570	210	430	377	784	300			158
	150DL511	11	810	438	590	220	450		883	320			199
	150DL515	15							972				237
	150DL518.5	18.5	848	476	610	238	470	381	979	340			300
	150DL522	22											325
	150DL530	30	912	520	650	262	510	468	1284	360	486		350
	150DL537	37							1404		494		350
	150DL545	45											350
200	200DL55.5	5.5	832	430	615	217	450	414	826	300	285		160
	200DL57.5	7.5	863	453	635	228	470	410	809	320			176
	200DL511	11							908				212
	200DL515	15	896	479	655	241	490	411	995	340			260
	200DL518.5	18.5	932	512	675	257	510	415	1001	360			305
	200DL522	22											330
	200DL530	30	937	520		262		483	1284		486		350
	200DL537	37							1404		494		370
	200DL545	45											370
250	250DL57.5	7.5	969	525	700	269	500	622	904	370	400		260
	250DL511	11	993	541	720	273	520	634	1000	390			320
	250DL515	15	1007	549	730	277	530	646	1086	400			380
	250DL518.5	18.5							1089				420
	250DL522	22											440
	250DL530	30	1125	660	790	335	590	706	1336	460	538		458
	250DL537	37							1475		565		522
	250DL545	45											540
300	300DL511	11	1100	588	798	302	575	671	1050	420	450		365
	300DL515	15							1131				395
	300DL518.5	18.5	1135	618	818	317	595	668		440			440
	300DL522	22											465
	300DL530	30	1172	660	838	335	615	726	1336	460	538		458
	300DL537	37							1475		565		522
	300DL545	45											540

(*) -L.W.L (Low Water Level)
-Operation is limited to 10 minutes at L.W.L.
-Operation is limited to 30 minutes with water level below top of motor

DIMENSIONS AND WEIGHT

50 Hz

Rev. E

65DL, 80DL (1.5÷3.7 kW) with QDC

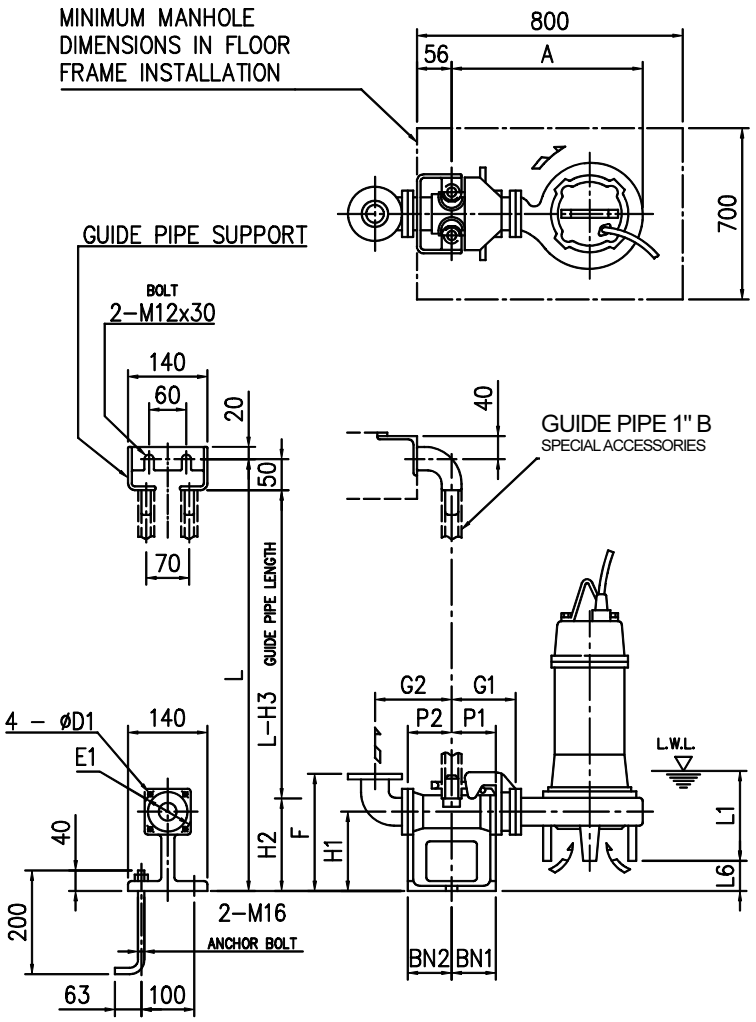

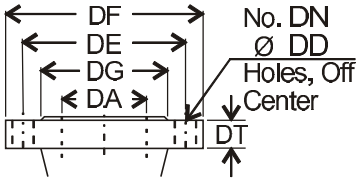

Discharge flange dimensions [mm] - EN 1092-2							
Type	DA	DE	DF	DG	DT	DN	DD
Round	65	145	185	118	17	4	19
	80	160	200	132	19	8	

Dimensions [mm]																			
Size DA	Model	Output [kW]	A	P1	P2	G1	G2	F	H1	H2	H3	L1 (*)	L6	BN1	BN2	D1	E1	QDC Model	QDC Weight [kg]
65	65DL51.5	1.5	464	75	95	120	160	250	145	190	240	140	50	75	95	12	140	LM65	14
80	80DL51.5	1.5	481		90	125	165	285	175	230	280	165	65		90	15	155	LM80	17
	80DL52.2	2.2	499																
	80DL53.7	3.7	524																

(*)
- L.W.L (Low Water Level)
- Operation is limited to 10 minutes at L.W.L.
- Operation is limited to 30 minutes with water level below top of motor

DIMENSIONS AND WEIGHT

50 Hz

Rev. E

80DL (5.5÷7.5), 100DL with QDC

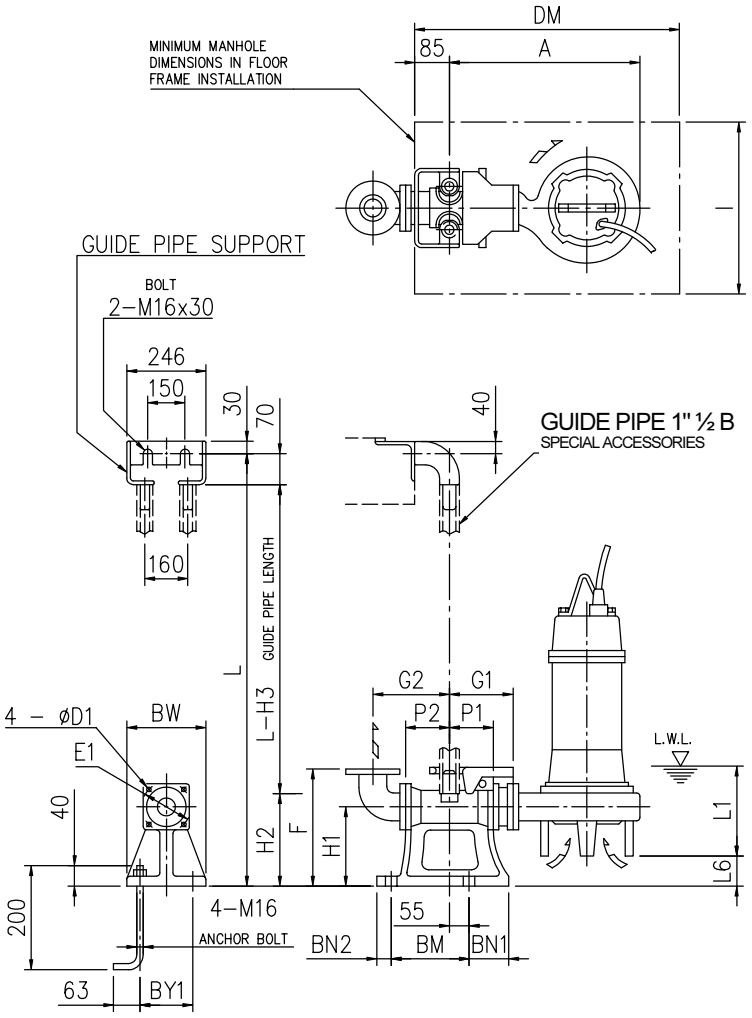

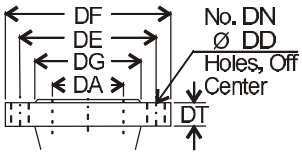

Discharge flange dimensions [mm] - EN 1092-2							
Type	DA	DE	DF	DG	DT	DN	DD
Round	80	160	200	132	19	8	19
	100	180	220	156	21		

Dimensions [mm]																								
Size DA	Model	Output [kW]	A	P1	P2	G1	G2	F	H1	H2	H3	L1 (*)	L6	BN1	BN2	BM	BY1	BW	DM	I	D1	E1	QDC Model	QDC Weight [kg]
80	80DLC55.5	5.5	635	105	120	185	195	350	240	255	325	205	43	100	40	220	180	230	800	700	15	155	LL80	44
	80DLC57.5	7.5	665										45											
100	100DL53.7	3.7	589		105		210	365		265	335	185	115								19	175	LL100	46
	100DLB55.5	5.5	621									205	42											
	100DLC55.5	5.5	635		120		225			255	325		43								15	155	LL80	44
	100DLB57.5	7.5	648		105		210			265	335		42								19	175	LL100	46
	100DLC57.5	7.5	665		120		225			255	325		45								15	155	LL80	44
	100DL511	11	676		105		210			265	335		42						1000		19	175	LL100	46
	100DL515	15	716										35											
	100DL518.5	18.5																						

(*)
- L.W.L (Low Water Level)
- Operation is limited to 10 minutes at L.W.L.
- Operation is limited to 30 minutes with water level below top of motor

DIMENSIONS AND WEIGHT

50 Hz

Rev. E

150DL, 200DL with QDC

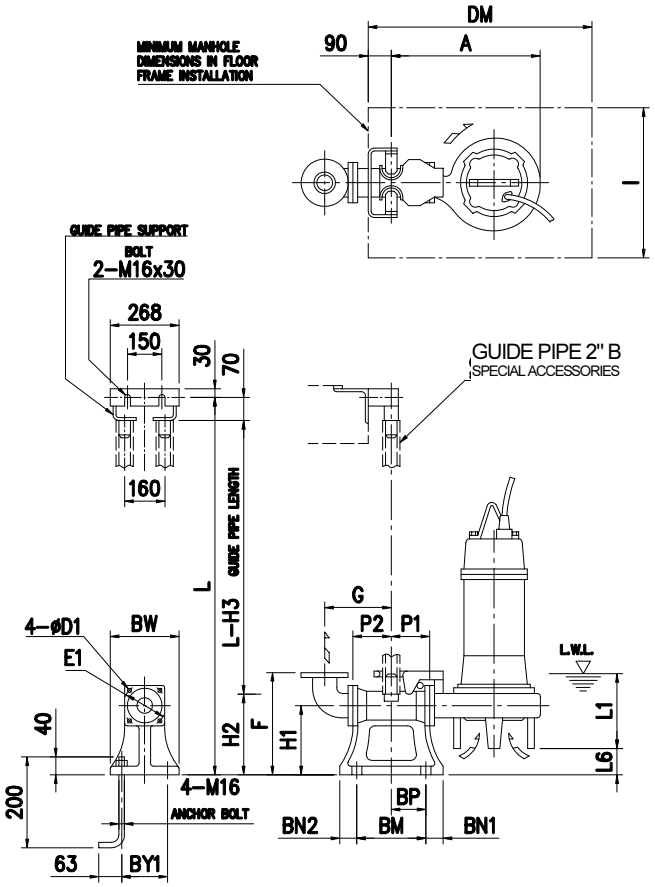

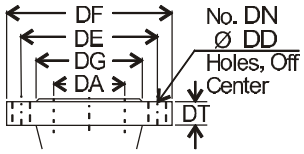

Discharge flange dimensions [mm] - EN 1092-2							
Type	DA	DE	DF	DG	DT	DN	DD
Round	150	240	285	211	23	8	23
	200	295	340	266			

Dimensions [mm]																								
Size DA	Model	Output [kW]	A	P1	P2	G	F	H1	H2	H3	L1 (*)	L6	BN1	BN2	BM	BP	BY1	BW	DM	I	D1	E1	QDC Model	QDC Weight [kg]
150	150DL55.5	5.5	635	155	195	325	450	290	362	432	245	69	60	60	370	165	280	330	1000	700	16	210	LL125	65
	150DL57.5	7.5	665									73												
	150DL511	11	695																					
	150DL515	15																						
	150DL518.5	18.5	733									69												
	150DL522	22																						
	150DL530	30	777		205	355	480	320	405	475	288	210			390	170	300	350	1100	800		250	LL150	80
	150DL537	37									296													
	150DL545	45																						
200	200DL55.5	5.5	672				495				285	81												
	200DL57.5	7.5	703									85												
	200DL511	11																						
	200DL515	15	736									84												
	200DL518.5	18.5	772									80												
	200DL522	22																						
	200DL530	30	777								288	210												
	200DL537	37									296													
	200DL545	45																						

(*)
- L.W.L (Low Water Level)
- Operation is limited to 10 minutes at L.W.L.
- Operation is limited to 30 minutes with water level below top of motor

DIMENSIONS AND WEIGHT

50 Hz

Rev. E

250DL, 300DL with QDC

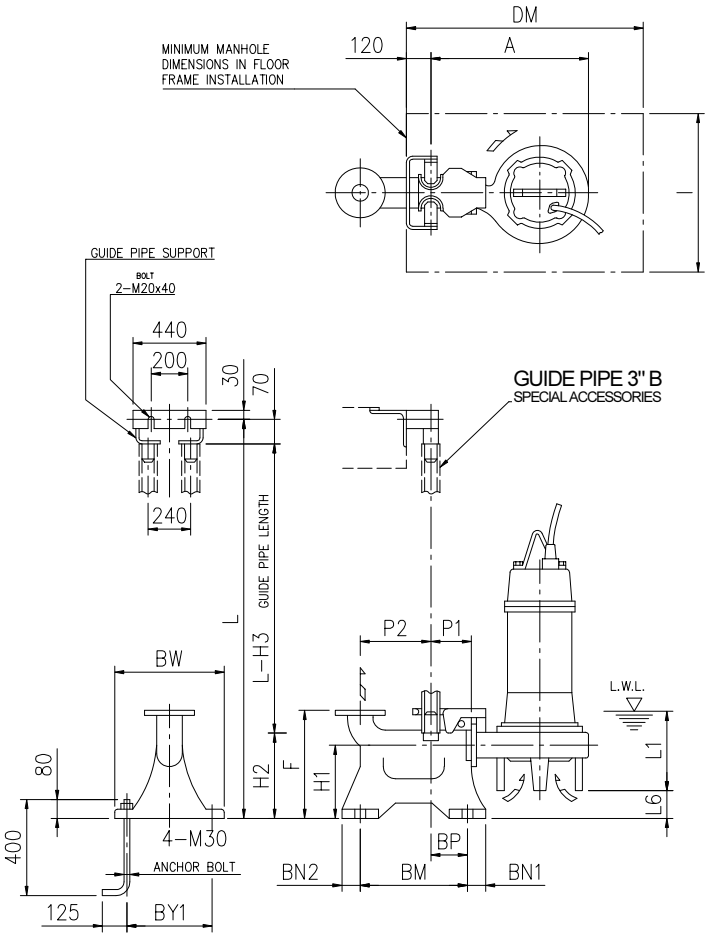

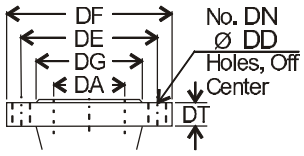

Discharge flange dimensions [mm] - EN 1092-2							
Type	DA	DE	DF	DG	DT	DN	DD
Round	250	350	395	319	25	12	23
	300	400	445	370	24		

Dimensions [mm]																					
Size DA	Model	Output [kW]	A	P1	P2	F	H1	H2	H3	L1 (*)	L6	BN1	BN2	BM	BP	BY1	BW	DM	I	QDC Model	QDC Weight [kg]
250	250DL57.5	7.5	834	195	435	700	350	440	510	400	58	70	70	650	215	500	560	1200	900	LL250	150
	250DL511	11	858								46										
	250DL515	15	872								34										
	250DL518.5	18.5																			
	250DL522	22																			
	250DL530	30	990		465	970	430	550	620	292	300			680		580	640			LL300	200
	250DL537	37								319											
	250DL545	45																			
300	300DL511	11	917			800				450	109										
	300DL515	15																			
	300DL518.5	18.5	952								112										
	300DL522	22																			
	300DL530	30	990			970				292	300										
	300DL537	37								319											
	300DL545	45																			

(*)
- L.W.L (Low Water Level)
- Operation is limited to 10 minutes at L.W.L.
- Operation is limited to 30 minutes with water level below top of motor

DIMENSIONS AND WEIGHT

50 Hz

Rev. E

DL W/C

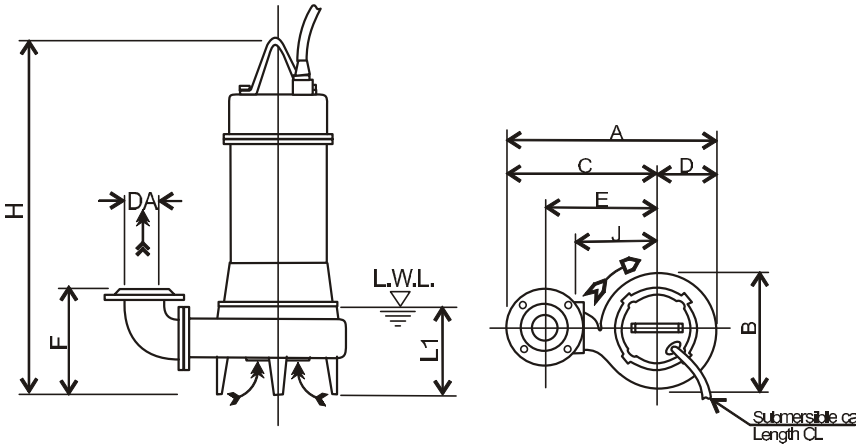

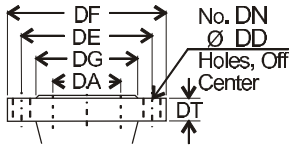

Discharge flange dimensions [mm] - EN 1092-2							
Type	DA	DE	DF	DG	DT	DN	DD
Round	65	145	185	118	17	4	19
	80	160	200	132	19	8	
	100	180	220	156	21		

Dimensions [mm]													
Size DA	Model	Output [kW]	A	B	C	D	E	F	H	J	L1 (*)	CL [m]	Weight [kg]
65	65DL51.5W/C	1.5	497	291	353	144	265	200	576	200	140	10	52
80	80DL51.5W/C	1.5	524	292	378	146	285	220	597	210	165		55
	80DL52.2W/C	2.2	542	308	388	154	295		654	220			67
	80DL53.7W/C	3.7	567	328	403	164	310		687	235			75
100	100DL53.7W/C	3.7	614	335	445	169	340	250	706		185		79
	100DLB55.5W/C	5.5	646	369	460	186	355	323	768	250	205		123
	100DLB57.5W/C	7.5	673	385	480	193	375		760	270			141

(*)
- L.W.L (Low Water Level)
- Operation is limited to 10 minutes at L.W.L.
- Operation is limited to 30 minutes with water level below top of motor

DIMENSIONS AND WEIGHT

50 Hz

Rev. E

65DL W/C, 80DL W/C (1.5÷3.7 kW) with QDC

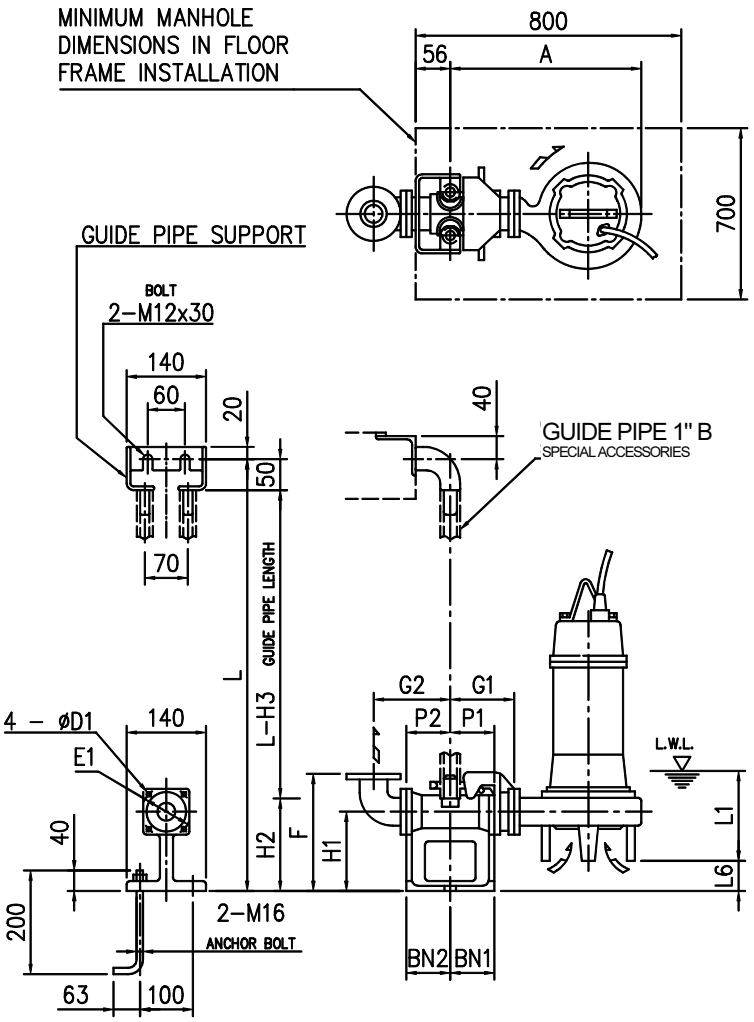

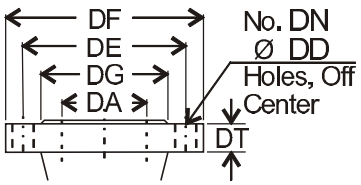

Discharge flange dimensions [mm] - EN 1092-2							
Type	DA	DE	DF	DG	DT	DN	DD
Round	65	145	185	118	17	4	19
	80	160	200	132	19	8	

Dimensions [mm]																			
Size DA	Model	Output [kW]	A	P1	P2	G1	G2	F	H1	H2	H3	L1 (*)	L6	BN1	BN2	D1	E1	QDC Model	QDC Weight [kg]
65	65DL51.5W/C	1.5	464	75	95	120	160	250	145	190	240	140	50	75	95	12	140	LM65	14
80	80DL51.5W/C	1.5	481		90	125	165	285	175	230	280	165	65		90	15	155	LM80	17
	80DL52.2W/C	2.2	499																
	80DL53.7W/C	3.7	524																

(*)
- L.W.L (Low Water Level)
- Operation is limited to 10 minutes at L.W.L.
- Operation is limited to 30 minutes with water level below top of motor

DIMENSIONS AND WEIGHT

50 Hz

Rev. E

100DL W/C with QDC

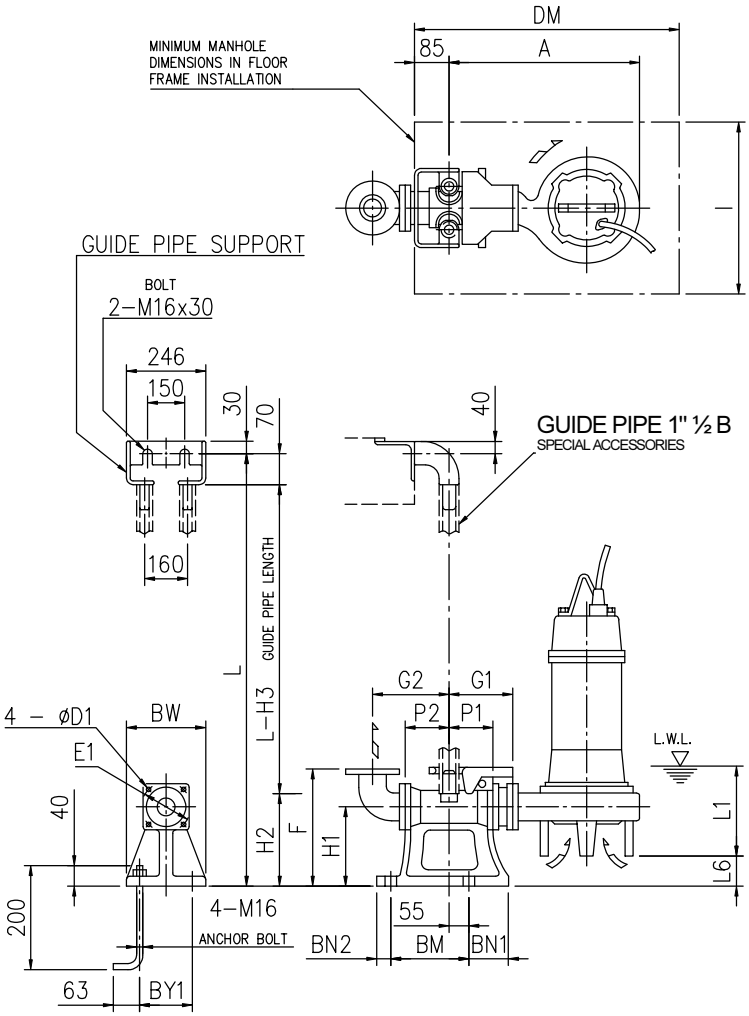

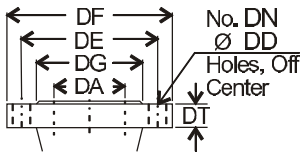

Discharge flange dimensions [mm] - EN 1092-2							
Type	DA	DE	DF	DG	DT	DN	DD
Round	100	180	220	156	21	8	19

Dimensions [mm]																							
Size DA	Model	Output [kW]	A	P1	P2	G1	G2	F	H1	H2	H3	L1 (*)	L6	BN1	BN2	BM	BY1	BW	DM	I	D1	E1	QDC Model	QDC Weight [kg]
100	100DL53.7W/C	3.7	589	105	105	185	210	365	240	265	335	185	115	100	40	220	180	230	800	700	19	175	LL100	46
	100DLB55.5W/C	5.5	621									205	42											
	100DLB57.5W/C	7.5	648																					

(*)
- L.W.L (Low Water Level)
- Operation is limited to 10 minutes at L.W.L.
- Operation is limited to 30 minutes with water level below top of motor

DIMENSIONS AND WEIGHT

50 Hz

Rev. E

DML

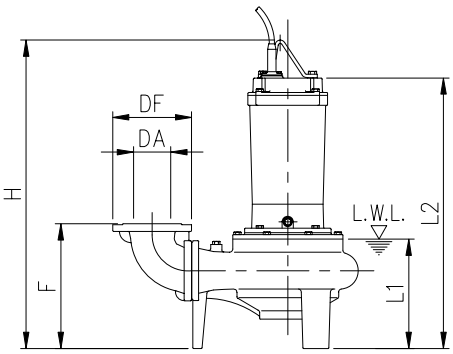

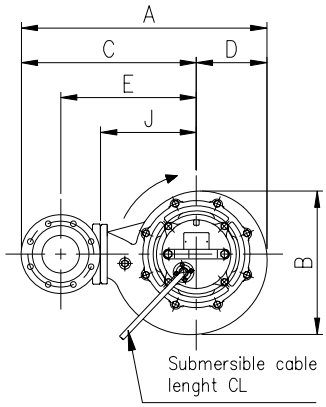

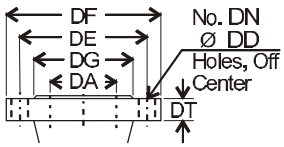

Discharge flange dimensions [mm] - EN 1092-2							
Type	DA	DE	DF	DG	DT	DN	DD
Round	80	160	200	132	19	8	19
	100	180	220	156	21		
	150	240	285	211	23		23

Dimensions [mm]														
Size DA	Model	Output [kW]	A	B	C	D	E	F	H	J	L1 (*)	L2	CL [m]	Weight [kg]
80	80DML52.2	2.2	542	320	385	157	285	308	668	210	279	547	10	80
	80DML53.7	3.7							727			627		87
100	100DML53.7	3.7	582		425		315	313						89
	100DML55.5	5.5	658	381	470	188	360	339	824	255	310	724		121
	100DML57.5	7.5												125
	100DML511	11	751	455	530	221	420	355	938	315	329	778		160
	100DML515	15												166
	100DML522	22	795	497	550	245	440	358	1021	335	342	841		226
150	150DML55.5	5.5	715.5	381	527.5	188	385	369	824	255	310	724		127
	150DML57.5	7.5												132
	150DML511	11	808.5	455	587.5	221	445	385	938	315	329	778		166
	150DML515	15												172
	150DML522	22	852.5	497	607.5	245	465	388	1021	335	342	841		232

(*)
- L.W.L (Low Water Level)
- Operation is limited to 10 minutes at L.W.L.
- Operation is limited to 30 minutes with water level below top of motor

DIMENSIONS AND WEIGHT

50 Hz

Rev. E

80DML, 100DML (3.7 kW) with QDC

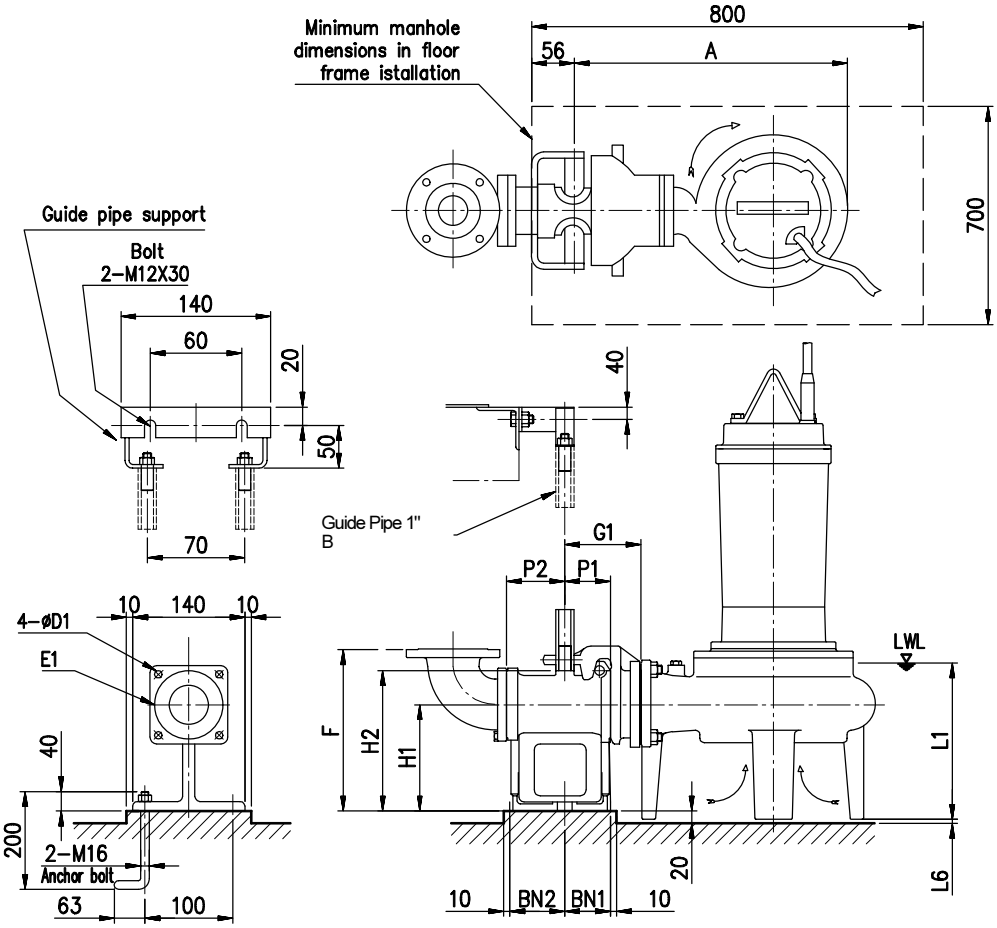

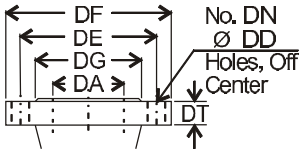

Discharge flange dimensions [mm] - EN 1092-2							
Type	DA	DE	DF	DG	DT	DN	DD
Round	80	160	200	132	19	8	19
	100	180	220	156	21		

Dimensions [mm]																		
Size DA	Model	Output [kW]	A	P1	P2	G1	G2	F	H1	H2	L1 (*)	L6	BN1	BN2	D1	E1	QDC Model	QDC Weight [kg]
80	80DML52.2	2.2	492	75	90	125	165	295	175	230	279	7	75	90	15	155	LM80	17
	80DML53.7	3.7																
100	100DML53.7	3.7					195	300										

(*)
- L.W.L (Low Water Level)
- Operation is limited to 10 minutes at L.W.L.
- Operation is limited to 30 minutes with water level below top of motor

DIMENSIONS AND WEIGHT

50 Hz

Rev. E

100DML (5.5÷22 kW), 150DML with QDC

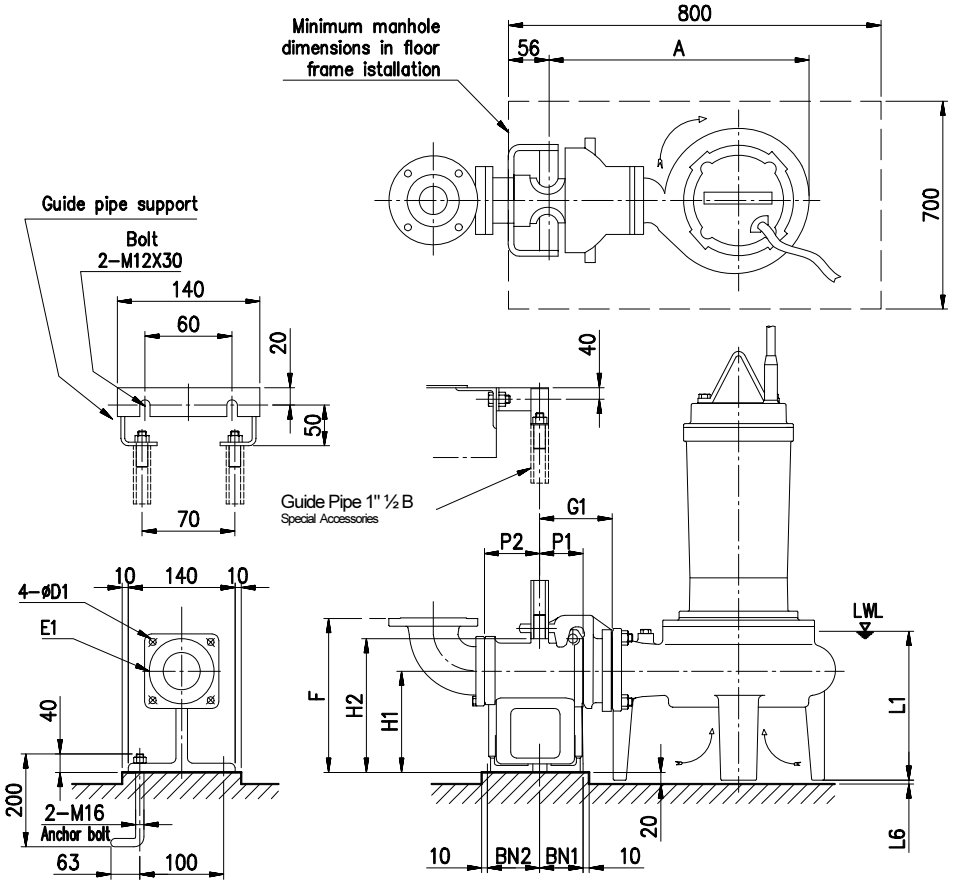

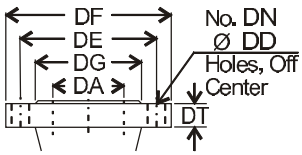

Discharge flange dimensions [mm] - EN 1092-2							
Type	DA	DE	DF	DG	DT	DN	DD
Round	100	180	220	156	21	8	19
	150	240	285	211	23		23

Dimensions [mm]																							
Size DA	Model	Output [kW]	A	P1	P2	G1	G2	F	H1	H2	L1 (*)	L6	BN1	BN2	BM	BY1	BW	DM	I	D1	E1	QDC Model	Weight [kg]
100	100DML55.5	5.5	628	105	105	185	210	370	240	265	310	31	100	40	220	180	230	800	700	19	175	LL100	46kg
	100DML57.5	7.5																					
	100DML511	11	721								329	15						1000					
	100DML515	15																					
	100DML522	22	765								342	12											
150	150DML55.5	5.5	628				235	400			310	31						800					
	150DML57.5	7.5																					
	150DML511	11	721								329	15						1000					
	150DML515	15																					
	150DML522	22	765								342	12											

(*)
- L.W.L (Low Water Level)
- Operation is limited to 10 minutes at L.W.L.
- Operation is limited to 30 minutes with water level below top of motor

DIMENSIONS AND WEIGHT

50 Hz

Rev. E

DMLV

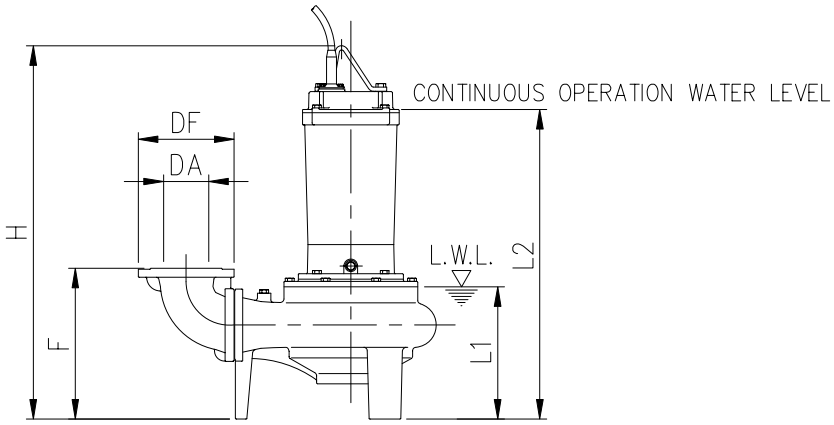

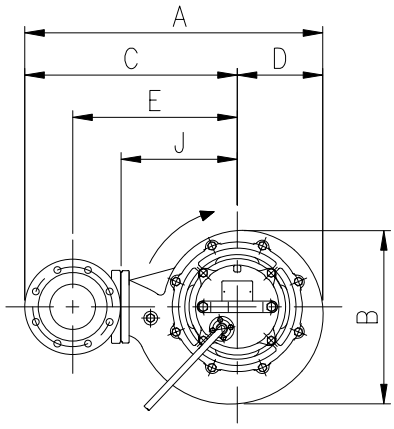

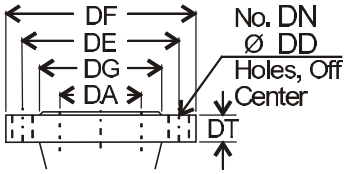

Discharge flange dimensions [mm] - EN 1092-2							
Type	DA	DE	DF	DG	DT	DN	DD
Round	80	160	200	132	19	8	19
	100	180	220	156	21		

Dimensions [mm]														
Size DA	Model	Output [kW]	A	B	C	D	E	F	H	J	L1 (*)	L2	CL [m]	Weight [kg]
80	80DMLV52.2	2.2	518	285	375	143	275	254	660	200	200	560	10	70
	80DMLV53.7	3.7							721			620		80
100	100DMLV55.5	5.5	584	308	430	154	320	305	860	215	250	760		105
	100DMLV57.5	7.5	641	352	465	176	355			250				120
	100DMLV511	11							970			810		150
	100DMLV515	15	728	426	515	213	405			300				180
	100DMLV522	22							1045			865		235

(*)
- L.W.L (Low Water Level)
- Operation is limited to 10 minutes at L.W.L.
- Operation is limited to 30 minutes with water level below top of motor

DIMENSIONS AND WEIGHT

50 Hz

Rev. E

80DMLV with QDC

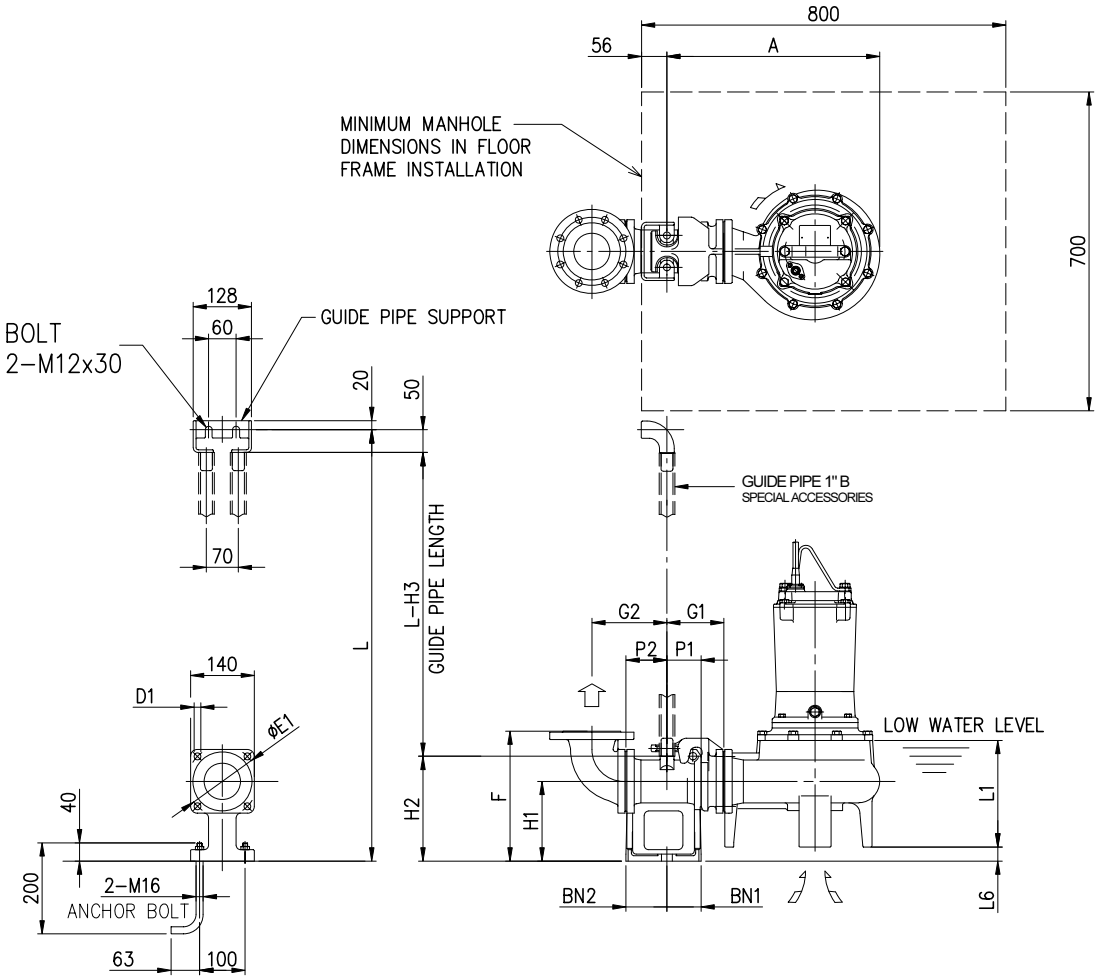

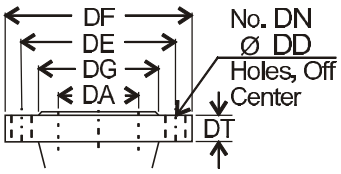

Discharge flange dimensions [mm] - EN 1092-2							
Type	DA	DE	DF	DG	DT	DN	DD
Round	80	160	200	132	19	8	19

Dimensions [mm]																			
Size DA	Model	Output [kW]	A	P1	P2	G1	G2	F	H1	H2	H3	L1 (*)	L6	BN1	BN2	D1	E1	QDC Model	QDC Weight [kg]
80	80 DMLV 52.2	2.2	468	75	90	125	165	285	175	230	280	200	31	75	90	15	155	LM80	17
	80 DMLV 53.7	3.7																	

(*)
- L.W.L (Low Water Level)
- Operation is limited to 10 minutes at L.W.L.
- Operation is limited to 30 minutes with water level below top of motor

DIMENSIONS AND WEIGHT

50 Hz

Rev. E

100DMLV with QDC

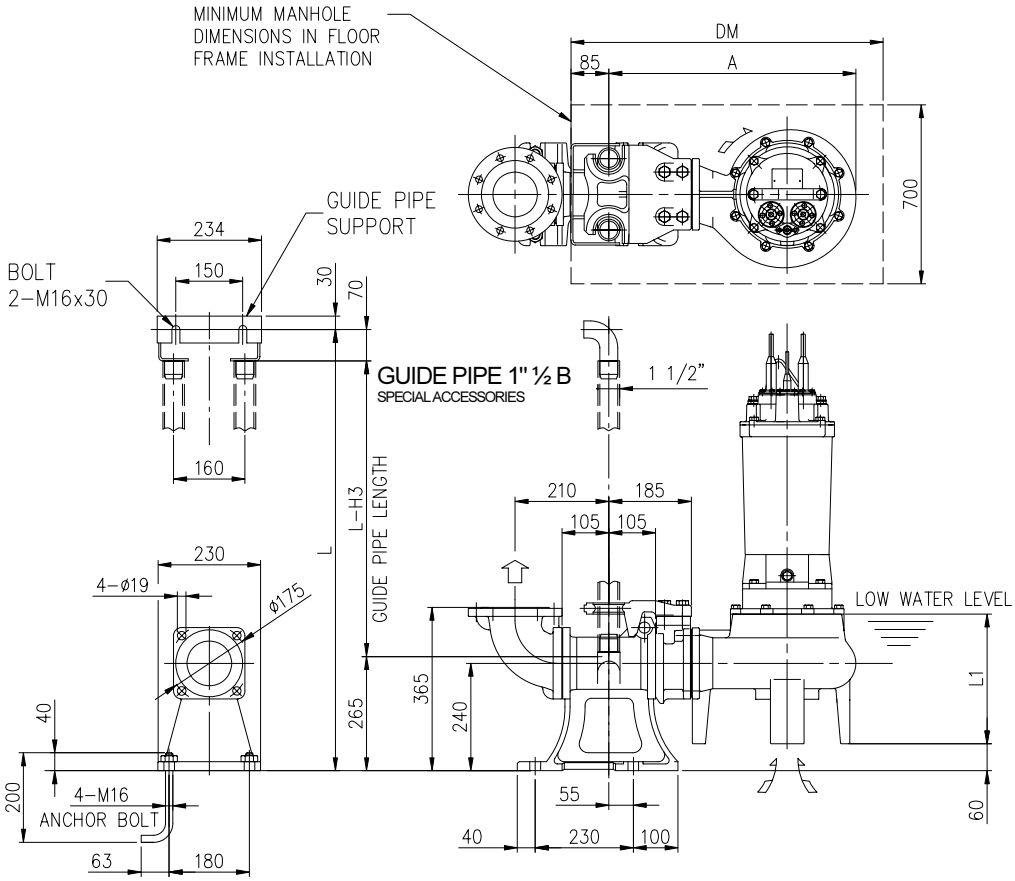

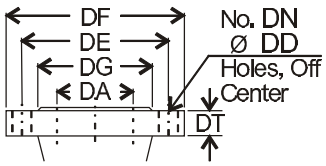

Discharge flange dimensions [mm] - EN 1092-2							
Type	DA	DE	DF	DG	DT	DN	DD
Round	100	180	220	156	21	8	19

Dimensions [mm]							
Size DA	Model	Output [kW]	A	H3	L1 (*)	QDC Model	QDC Weight [kg]
100	100DML55.5	5.5	554	335	250	LL100	46
	100DML57.5	7.5	611				
	100DML511	11					
	100DML515	15	698		300		
	100DML522	22					

(*)
- L.W.L (Low Water Level)
- Operation is limited to 10 minutes at L.W.L.
- Operation is limited to 30 minutes with water level below top of motor

MOTOR DATA

50 Hz

Rev. E

DS, DVS (1.5÷3.7 kW) MOTOR DATA

Output [P_2]			[kW]	1.5			2.2			3.7		
Resistance at 20° C			[Ω]	11.973			4.942			2.647		
GD²			[kg·m²]	0.0057			0.0082			0.011		
Voltage			[V]	380	400	415	380	400	415	380	400	415
Load	0%	Current	[A]	1.25	1.32	1.30	1.95	2.15	2.33	3.20	3.30	3.90
		Power	[W]	430	405	400	500	500	252	800	500	600
	75%	Current	[A]	2.92	2.62	2.61	4.07	4.06	3.82	7.07	6.32	6.45
		Efficiency	[%]	63.59	69.18	70.11	71.23	69.69	77.58	68.00	75.54	74.26
		Power factor	[%]	91.93	89.54	85.68	86.44	84.27	77.40	87.75	83.92	80.61
		Speed	[min^{-1}]	2872	2887	2898	2895	2901	2927	2890	2917	2922
	100%	Current	[A]	3.70	3.30	3.30	5.10	5.00	4.60	8.80	7.80	7.80
		Efficiency	[%]	65.61	71.25	70.89	73.05	72.28	79.33	70.79	77.64	76.74
		Power factor	[%]	93.88	92.08	89.21	89.71	87.87	83.88	90.24	88.18	86.00
		Speed	[min^{-1}]	2821	2847	2854	2851	2864	2900	2847	2886	2890
Locked Rotor Torque			[%]	243	295	303	161	186	184	175	216	233
Start Current			[A]	20.5	21.1	22.5	28.7	30.0	31.5	51.2	51.0	53.0
No. starts per hour				10								
Model				ZDSEU								

MOTOR DATA

50 Hz

Rev. E

DS (5.5÷7.5 kW) MOTOR DATA

Output [P_2]			[kW]	5.5			7.5		
Resistance at 20° C			[Ω]	2.001			1.345		
GD²			[kg·m²]	0.03			0.037		
Voltage			[V]	380	400	415	380	400	415
Load	0%	Current	[A]	3.00	2.70	2.70	3.65	3.20	3.27
		Power	[W]	340	800	340	400	800	400
	75%	Current	[A]	8.37	8.36	7.59	11.43	11.02	10.17
		Efficiency	[%]	82.89	77.34	83.68	83.36	79.51	84.44
		Power factor	[%]	90.37	92.05	90.40	89.70	92.68	91.14
		Speed	[min^{-1}]	2944	2932	2945	2941	2928	2942
	100%	Current	[A]	10.80	10.80	9.80	14.80	14.30	13.20
		Efficiency	[%]	83.87	79.10	84.51	84.26	80.96	85.13
		Power factor	[%]	92.25	92.92	92.39	91.34	93.50	92.85
		Speed	[min^{-1}]	2922	2905	2923	2917	2900	2918
Locked Rotor Torque			[%]	168	155	168	159	154	159
Start Current			[A]	77.0	70.0	70.0	105.0	93.5	94.0
No. starts per hour				10					
Model				ZDSEU					

MOTOR DATA

50 Hz

Rev. E

DL, DL W/C (1.5÷3.7 kW) MOTOR DATA

Output [P_2]			[kW]	1.5			2.2			3.7		
Resistance at 20° C			[Ω]	8.466			5,937			3,447		
GD²			[kg·m²]	0.013			0.025			0.04		
Voltage			[V]	380	400	415	380	400	415	380	400	415
Load	0%	Current	[A]	2.3	2.51	2,746	2.65	2.85	3.2	3.5	3.65	3.9
		Pow er	[W]	500	420	546	650	450	420	650	800	450
	75%	Current	[A]	3.47	3.37	3.56	4.65	4.34	4.46	6.70	6.73	6.25
		Efficiency	[%]	62.67	70.31	62.99	63.89	69.75	69.23	73.21	69.72	76.38
		Pow er factor	[%]	78.70	68.43	69.87	84.32	78.63	74.40	85.95	85.37	80.93
		Speed	[min⁻¹]	1438	1449	1446	1440	1452	1458	1447	1449	1455
	100%	Current	[A]	4.10	3.90	4.10	5.70	5.20	5.20	8.40	8.30	7.60
		Efficiency	[%]	65.69	72.58	65.73	66.44	72.31	71.82	74.67	72.09	77.98
		Pow er factor	[%]	84.62	76.54	77.83	88.26	84.45	81.96	89.62	89.25	86.85
		Speed	[min⁻¹]	1414	1432	1426	1417	1437	1443	1427	1430	1440
Locked Rotor Torque			[%]	319	378	385	216	277	301	229	275	296
Start Current			[A]	23.70	24.50	23.60	29.30	30.00	32.00	49.40	47.50	49.00
No. starts per hour				10								
Model				ZDLEU								

MOTOR DATA

50 Hz

Rev. E

DL (5.5÷11 kW), DL W/C (5.5÷7.5 kW) MOTOR DATA

Output [P_2]			[kW]	5.5			7.5			11		
Resistance at 20° C			[Ω]	2,339			1,513			-	0.869	
GD²			[kg·m²]	0.061			0.071			0.12		
Voltage			[V]	380	400	415	380	400	415	380	400	415
Load	0%	Current	[A]	4.9	4.3	4.5	7.85	6.5	7.1	-	7.80	8.60
		Power	[W]	470	900	470	707	1200	707	-	1500	790
	75%	Current	[A]	9.38	8.97	8.58	13.38	12.46	12.07	-	17.03	16.81
		Efficiency	[%]	79.17	75.51	79.10	79.46	76.94	79.81	-	80.39	81.35
		Power factor	[%]	84.39	87.90	84.53	80.38	84.72	81.25	-	86.98	83.95
		Speed	[min^{-1}]	1464	1458	1464	1467	1463	1467	-	1468	1470
	100%	Current	[A]	11.70	11.30	10.70	16.40	15.50	14.80	-	21.50	21.00
		Efficiency	[%]	80.42	77.14	80.38	80.98	78.64	81.26	-	82.12	82.29
		Power factor	[%]	88.83	91.07	88.97	85.80	88.81	86.76	-	89.92	88.56
		Speed	[min^{-1}]	1451	1442	1451	1455	1449	1455	-	1456	1458
Locked Rotor Torque			[%]	271	249	271	288	272	288	-	185	155
Start Current			[A]	81.00	70.00	74.00	120.00	104.00	108.00	-	121.0	128.0
No. starts per hour				10						6		
Model				ZDLEU								

MOTOR DATA

50 Hz

Rev. E

DL (15÷22 kW) MOTOR DATA

Output [P_2]			[kW]	15			18.5			22		
Resistance at 20° C			[Ω]	-	0.677		-	0.439		-	0.376	
GD²			[kg·m²]	0.15			0.25			0.28		
Voltage			[V]	380	400	415	380	400	415	380	400	415
Load	0%	Current	[A]	-	8.50	8.85	-	12.80	15.10	-	12.50	13.50
		Power	[W]	-	1600	880	-	2000	1300	-	2000	965
	75%	Current	[A]	-	22.13	21.11	-	27.76	27.38	-	32.73	31.37
		Efficiency	[%]	-	81.59	84.15	-	84.25	85.39	-	82.74	85.54
		Power factor	[%]	-	89.91	88.12	-	85.61	82.55	-	87.94	85.56
		Speed	[min^{-1}]	-	1464	1464	-	1477	1480	-	1471	1473
	100%	Current	[A]	-	28.50	27.00	-	35.00	34.00	-	42.00	40.00
		Efficiency	[%]	-	82.79	84.99	-	85.77	86.79	-	84.17	86.11
		Power factor	[%]	-	91.76	90.93	-	88.95	87.23	-	89.82	88.86
		Speed	[min^{-1}]	-	1450	1451	-	1469	1472	-	1460	1463
Locked Rotor Torque			[%]	-	171	182	-	171	185	-	155	169
Start Current			[A]	-	160.0	167.0	-	238.0	248.0	-	265.0	265.0
No. starts per hour				6								
Model				ZDLEU								

MOTOR DATA

50 Hz

Rev. E

DL (30÷45 kW) MOTOR DATA

Output [P_2]			[kW]	30			37			45		
Resistance at 20° C			[Ω]	0.236			0.152			0.117		
GD²			[kg·m²]	0.72			1.11			1.32		
Voltage			[V]	380	400	415	380	400	415	380	400	415
Load	0%	Current	[A]	20	23.7	27.3	25.4	31.4	36.3	29.7	36.2	41.9
		Power	[W]	925	1104	1332	1116	1584	1956	1320	1752	2172
	75%	Current	[A]	45.69	45.96	47.48	56.47	58.11	60.14	68.59	70.07	72.18
		Efficiency	[%]	89.77	89.48	87.78	91.33	90.25	89.33	90.25	88.93	88.13
		Power factor	[%]	83.35	78.97	75.10	81.75	76.38	71.87	82.84	78.17	73.81
		Speed	[min^{-1}]	1462	1464	1466	1479	1480	1481	1476	1478	1479
	100%	Current	[A]	59.00	58.00	58.50	72.50	72.50	73.50	88.00	87.50	88.50
		Efficiency	[%]	89.28	89.39	88.21	91.57	90.89	90.29	90.63	89.83	89.28
		Power factor	[%]	86.41	83.45	80.60	84.64	80.95	77.56	85.56	82.33	79.12
		Speed	[min^{-1}]	1447	1451	1453	1470	1472	1473	1467	1470	1471
Locked Rotor Torque			[%]	245	272	294	154	171	184	156	173	186
Start Current			[A]	356.50	377.40	393.20	390.70	413.90	431.30	497.80	527.40	549.70
No. starts per hour				6								
Model				ZDLEU								

DML, DMLV (2.2÷3.7 kW) MOTOR DATA

Output [P_2]			[kW]	2.2			3.7		
Resistance at 20° C			[Ω]	7.015			3.623		
GD²			[kg·m²]	0.02			0.03		
Voltage			[V]	380	400	415	380	400	415
Load	0%	Current	[A]	2.13	2.52	2.81	3.29	3.88	4.45
		Power	[W]	450	480	580	620	780	840
	75%	Current	[A]	4.33	4.21	4.32	6.79	6.77	6.95
		Efficiency	[%]	67.11	68.45	67.13	72.12	71.40	69.56
		Power factor	[%]	86.20	82.63	79.22	86.08	82.84	79.82
		Speed	[min^{-1}]	1428	1437	1442	1439	1443	1447
	100%	Current	[A]	5.50	5.20	5.20	8.60	8.40	8.40
		Efficiency	[%]	67.56	69.50	68.98	72.79	72.71	71.61
		Power factor	[%]	89.53	87.56	85.08	89.58	87.44	85.44
		Speed	[min^{-1}]	1400	1411	1421	1416	1422	1428
Locked Rotor Torque			[%]	182	204	221	203	226	244
Start Current			[A]	24.30	25.70	26.70	45.50	48.10	50.00
No. starts per hour				10					
Model				ZDMIEU					

MOTOR DATA

50 Hz

Rev. E

DML, DMLV (5.5÷11 kW) MOTOR DATA

Output [P_2]			[kW]	5.5			7.5			11		
Resistance at 20° C			[Ω]	1.920			1.326			0.862		
GD²			[kg·m²]	0.059			0.076			0.120		
Voltage			[V]	380	400	415	380	400	415	380	400	415
Load	0%	Current	[A]	5.56	6.67	7.64	6.93	8.41	9.70	8.49	10.15	11.85
		Power	[W]	900	1200	1330	1200	1300	1600	1100	1450	1800
	75%	Current	[A]	10.30	10.51	10.83	13.65	14.06	14.48	18.26	19.27	19.66
		Efficiency	[%]	73.72	72.26	71.38	75.24	76.86	71.60	81.12	75.49	74.70
		Power factor	[%]	82.50	78.43	74.23	83.20	75.16	75.46	84.63	81.87	78.15
		Speed	[min^{-1}]	1454	1456	1460	1461	1460	1466	1462	1461	1465
	100%	Current	[A]	12.70	12.60	12.70	16.90	16.90	17.10	23.50	23.80	23.80
		Efficiency	[%]	75.37	74.50	74.06	76.89	79.01	74.60	81.65	77.41	77.06
		Power factor	[%]	87.04	84.27	81.03	87.39	80.89	81.76	87.68	85.82	83.31
		Speed	[min^{-1}]	1437	1440	1445	1445	1447	1455	1447	1446	1451
Locked Rotor Torque			[%]	227	252	272	231	256	278	154	170	184
Start Current			[A]	78.00	82.60	87.80	110.20	116.50	121.70	128.20	136.00	141.90
No. starts per hour				10						7		
Model				ZDMEU								

MOTOR DATA

50 Hz

Rev. E

DML/DMLV (15÷22 kW) MOTOR DATA

Output [P_2]			[kW]	15			22		
Resistance at 20° C			[Ω]	0.563			0.308		
GD²			[kg·m²]	0.16			0.34		
Voltage			[V]	380	400	415	380	400	415
Load	0%	Current	[A]	10.8	13.13	15.08	13.37	16.27	18.82
		Power	[W]	1220	1650	2000	1500	2000	2100
	75%	Current	[A]	24.86	25.03	25.59	33.90	33.38	34.04
		Efficiency	[%]	79.66	78.43	77.65	84.98	85.54	83.88
		Power factor	[%]	86.32	82.71	78.78	87.01	83.40	80.41
		Speed	[min^{-1}]	1465	1464	1467	1473	1475	1474
	100%	Current	[A]	31.50	31.00	31.00	43.50	42.00	42.00
		Efficiency	[%]	80.84	80.23	79.78	85.80	86.52	85.34
		Power factor	[%]	89.13	86.77	84.16	89.33	87.27	85.16
		Speed	[min^{-1}]	1449	1451	1455	1462	1466	1466
Locked Rotor Torque			[%]	176	195	211	155	172	185
Start Current			[A]	199.80	211.90	220.90	299.80	318.50	332.70
No. starts per hour				7					
Model				ZDMEU					