NASTEC®
> we move it faster >

ANDO TECHNIK
Tel.: 040/8224565-0
www.ando-technik.com

EN

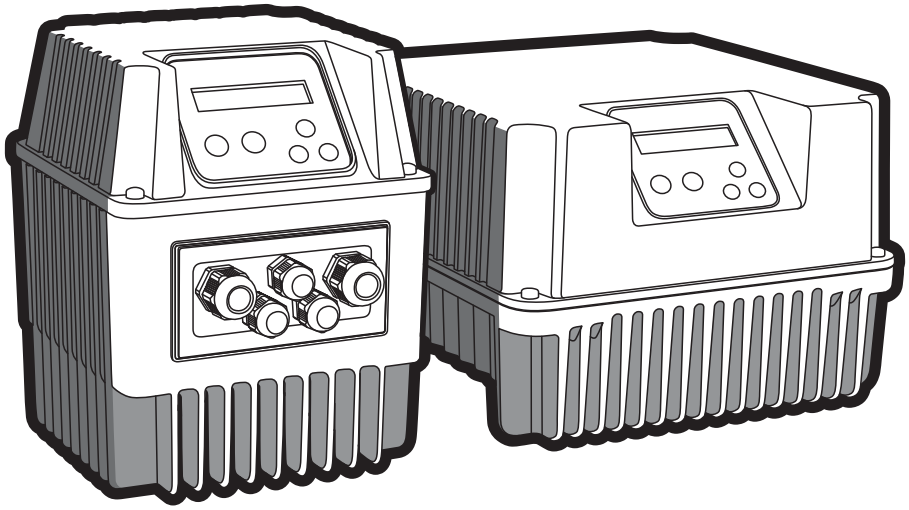

VASCO - VAriable Speed COntroller

Installation, use and maintenance manual

V 3.0
24/04/2022

Copyright © Nastec srl

The information contained in this document may be changed without notice

Nastec srl, Via della Tecnica, 8, 36048, Barbarano Mossano, Vicenza, Italy, Tel. +39 0444 886289, Fax +39 0444 776099, info@nastec.eu, nastec.eu

Table of Contents

1. Introduction 5
    1.1. Purpose of the manual 5
    1.2. Product overview 5
2. Safety 6
    2.1. Symbols 6
    2.2. Qualified personnel 6
    2.3. Safety warnings 6
    2.4. Acoustic emission 8
    2.5. Certifications 8
3. Maintenance 8
    3.1. Maintenance 8
    3.2. Warranty 9
    3.3. Product registration 9
    3.4. Spare parts 9
    3.5. Disassembly and repair 10
    3.6. Disposal 10
4. Transport and storage 10
    4.1. Transport 10
    4.2. Inspection on delivery 10
    4.3. Handling 11
    4.4. Storage 11
5. Technical features 11
    5.1. Name 11
    5.2. Technical Data 11
    5.3. Dimensions and weight 13
    5.4. Cables entry 13
6. Mechanical installation 14
    6.1. Installation environment 14
    6.2. Cooling 14
    6.3. Installation on the motor fan cover 15
    6.4. B35 motor-side assembly 16
    6.5. Wall installation 17
7. Electrical installation 20
    7.1. Grounding 20
    7.2. Protection devices 20
    7.3. Connecting cables 22
        7.3.1. Power cables 22
        7.3.2. Control cables 23
    7.4. Electromagnetic Compatibility (EMC) 23
    7.5. Electrical connections 23
        7.5.1. Power connections 24
        7.5.2. Control connections 30
8. Commissioning 32
    8.1. Preliminary checks 32
    8.2. Powering 32
9. Use and programming 32
    9.1. Keyboard and display 33
    9.2. Control via App 33
    9.3. Initial set-up 33
    9.4. FOC motor control 34
        9.4.1. Introduction 34
        9.4.2. FOC control calibration 35
        9.4.3. Adjusting the FOC control 36
    9.5. Initial display 36
        9.5.1. Operating parameters 36
        9.5.2. Diagnostics 37
    9.6. Menu 37
    9.7. Control parameters 38

9.8. Motor parameters 40
9.9. IN / OUT parameters 42
9.10. Connectivity parameters 43
10. Constant pressure operation 43
10.1. Introduction 43
10.2. The pressure vessel 43
10.3. Electrical connections 44
11. Splitting the pumping system 44
11.1. Introduction. 44
11.2. Variable speed pumping unit with one or two D.O.L. pumps. 45
11.2.1. Operating principle. 45
11.2.2. Electrical connections. 46
11.2.3. Programming. 46
11.3. Variable speed pumping unit with two or more pumps in COMBO mode. 46
11.3.1. Cascade operating principle. 46
11.3.2. Synchronous operating principle. 47
11.3.3. Electrical connections. 47
11.3.4. Programming the master unit. 47
11.3.5. Programming of slave units. 48
11.3.6. Automatic master replacement 48
12. Operation at constant differential pressure 48
12.1. Introduction 48
12.2. Electrical connections 49
12.3. Programming 49
13. Alarms 50
14. Warnings 54
15. EC Declaration of Conformity 55
16. UK Declaration of Conformity 56

1. Introduction

1.1. Purpose of the manual

The purpose of this manual is to provide users with detailed information on the installation, operation, and maintenance of the product, with special regard to safety regulations.

WARNING
Read the manual carefully before installing and using the product.

WARNING
Failure to follow the instructions may result in damage to the product, the system in which it is installed and, in the worst cases, damage to property or persons with even fatal consequences.

NOTE
Store the manual in a protected and easily accessible place next to the installation location for possible consultation. A digital copy of this manual can be downloaded from the manufacturer's website or via the QR code shown on the product itself.

The complete installation, use and maintenance manual of the product, constantly updated in its contents, can be downloaded by scanning the QR code shown in the product with the smartphone camera and following the relative link.

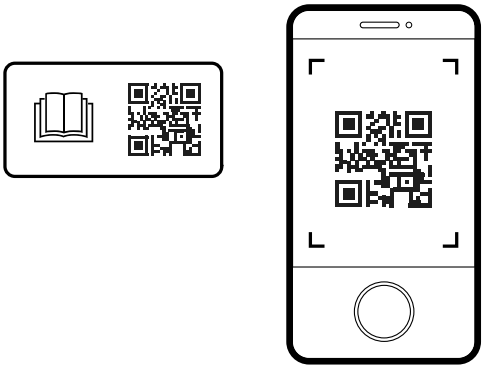

1.2. Product overview

VASCO - VAriable Speed COntrolleris a device for the control and protection of pumping systems based on the variation of the pump power supply frequency. It can be applied to both new and old systems ensuring:

- energy and economic savings
- simplified installation and lower system costs
- extended life of the system
- improved reliability

VASCO - VAriable Speed COntroller, when connected to any pump on the market, it manages its operation in order to keep a certain physical quantity constant (pressure, differential pressure, flow rate, temperature, etc.) as the conditions of use change. In this manner, the pump, or the pump system, is operated only when, and to the extent that, it is needed, thus avoiding unnecessary energy waste and extending its life. At the same time the device can:

- protect the motor from overloads and dry runs
- implement soft starts and soft stops to increase system life and reduce absorption peaks
- provide an indication of the current consumption and the supply voltage
- record the operating hours and, based on these, the errors and faults reported by the system
- control two other D.O.L. (Direct On Line) pumps at constant speed
- connect to other devices to obtain combined operation

Appropriate output filters, available upon request, allow reducing the dangerous overvoltages that are generated in very long cables and, therefore, make the device ideal also for controlling submerged pumps.

2. Safety

2.1. Symbols

TIP
This symbol indicates a TIP or recommendation.

NOTE
This symbol indicates a NOTE or an indication or concept to be emphasised.

CAUTION
This symbol indicates CAUTION, thus an indication which failure to respect can lead to minor or moderate damage.

WARNING
This symbol indicates a WARNING, thus an indication which, in the event of non-compliance, may lead to serious, even fatal damage to persons or things.

DANGER
This symbol indicates an ELECTRICAL HAZARD, which if not avoided will result in death or electrocution.

2.2. Qualified personnel

WARNING
The installation, use and maintenance of the product are strictly for qualified personnel who have undergone appropriate training. Any use by unqualified personnel must be carried out under the approval, responsibility, and close monitoring of the latter.

WARNING
Failure to follow the instructions may result in damage to the product, the system in which it is installed and, in the worst cases, damage to property or persons with even fatal consequences.

WARNING
Failure to comply with the instructions may lead to loss of warranty.

WARNING
Keep out of the reach of children.

2.3. Safety warnings

WARNING
During installation and use of the product, comply with the general safety regulations, working in a clean, dry environment, free of hazardous substances and using the appropriate accident prevention tools (gloves, helmet, goggles, shoes, and whatever else is necessary).

WARNING
The product is suitable for installation in industrial environments. In case of installation in a residential environment, it is recommended to adopt all the safety precautions required by local regulations.

WARNING
The unsuitable use of the product, non-original spare parts or tampering with the hardware and/or firmware of the product may lead to serious damage to property or persons in addition to the loss of warranty. The manufacturer waives all liability due to the improper use of its products.

WARNING
Before commissioning the product, ensure that the installation is safe and in accordance with local regulations.

WARNING
Comply with the provisions to meet EMC requirements.

WARNING
Use cables of the appropriate type and cross-section according to the electrical characteristics of the load, the ambient temperature and local regulations.

WARNING
Any insulation tests may only be performed in accordance with the manufacturer's instructions. Failure to do so may result in damage to the unit.

CAUTION
Electronic boards and components may be damaged by electrostatic discharge. We therefore, recommend to don't touch the components.

CAUTION
Take care during installation and electrical connection that no foreign bodies enter into the device.

DANGER
During the entire period in which the device is powered, regardless of whether it is operated or remains in stand-by (digital shutdown), high voltage is present inside the device and at the input and output terminals.

DANGER
The device, previously in stand-by condition, may suddenly start up following the reset of an alarm or changed system conditions. This may result in serious mechanical and electrical danger to the operator who, upon seeing the device stopped, may have intervened on it, on the load or on the system in which it is installed.

DANGER
Disconnect the device from the power supply, check that the load is completely stopped and wait at least 15 minutes before intervening on it or on the load applied to it.

DANGER
If the motor is of the permanent magnet type, the device may be energized by the passive rotation of the motor. In this case, both the power supply and the load should be disconnected before working on the device itself.

DANGER
Ensure that the device is fully closed and all fixing screws are properly tightened before supplying power. Do not remove the protective parts for any reason while the device is powered on.

DANGER
It is recommended to install the appropriate protection devices upstream of the device, such as a circuit breakers, fuses and a residual current device (RCD).

DANGER
Make sure that the device and the loads connected to it are properly grounded with the appropriate connection terminals before commissioning.

Ensure that the grounding system is compliant and refer to local regulations for grounding devices.

Each load must be fitted with its own earthing cable, the length of which must be as short as possible. Do not make interconnected grounding connections.

Leakage currents may exceed 3.5 mA. It is recommended to use the reinforced ground connection if necessary.

CAUTION
During operation, some surfaces may reach high temperatures that may cause burns upon contact with skin. Be very careful when touching the device!

Avoid contact with flammable products.

WARNING
Do not place any interrupting or switching devices between the inverter and the load. Interruption or switching during motor operation may cause serious damage to the device.

WARNING
Do not perform insulation tests on the load or power cable without first disconnecting them from the device.

2.4. Acoustic emission

The device has an acoustic emission:

<65 dB at a distance of 1 meter with cooling fans at maximum speed.

2.5. Certifications

The product has the following certifications:

- CE

3. Maintenance

3.1. Maintenance

WARNING
Before carrying out any work on the device, carefully read the chapter *Safety [6]* in the manual.

WARNING
Failure to follow the instructions may result in damage to the product, the system in which it is installed and, in the worst cases, damage to property or persons with even fatal consequences.

WARNING
Failure to comply with the instructions may lead to loss of warranty.

The device requires the following maintenance:

Intervention	Interval
Check that the unit is properly cooled, that the fans are functioning and that the cooling surfaces are clean	Every 6 months, or following a temperature alarm
Check for alarms	Every 12 months
Check the correct tightening of the power terminals	Every 12 months
Verify the maintenance of the protection rating (ingress of dust or water) by checking the tightening of the screws in the mechanical closing parts, the gaskets, and the cable glands.	Every 12 months

TIP
For more information contact the dealer or technical support at service@nastec.eu or by opening a support ticket on the portal service.nastec.eu

3.2. Warranty

Nastec guarantees that the products accompanied by this warranty are free from material or workmanship defects. The Company has the right to inspect any product returned under warranty, and confirm that the product contains a material or workmanship defect. The Company has the exclusive right to decide whether to repair or replace defective equipment, parts or components. To qualify for the warranty coverage, the buyer must return the product to the place of purchase. Subject to the terms and conditions listed below, the Company agrees to repair or replace any part of this product that has material or workmanship defects. The Company will evaluate products under warranty for 24 months from the date of installation (only in case of product registration) but no longer than 36 months from the date of invoice. IN NO EVENT shall the Company be liable for any other costs incurred by the customer in removing and/or fastening any product, part or component thereof. The Company reserves the right to change or improve its products or any part thereof, without being obliged to provide such a change or improvement for products previously sold. THIS WARRANTY DOES NOT APPLY to products damaged by natural events, including lightning, normal wear and tear, normal maintenance services, or any other condition beyond the control of the Company. THIS WARRANTY WILL BE VOIDED if any of the following conditions occurs:

- The product is used for purposes other than those for which it was designed and manufactured.
- The product has not been installed in accordance with applicable codes and rulings.
- The product has not been installed by qualified personnel.
- The item has been damaged due to negligence, abuse, misapplication, tampering, alteration, improper installation, operation, maintenance and storage.

If the customer wishes to make a warranty claim, it is necessary:

- Fill in the warranty claim on the service.nastec.eu portal
- Wait for the result from the Nastec technical support service. The outcome may envisage the following:
  - Absence of warranty based on the information received. A quotation for repair or spare parts may be made upon request.
  - Warranty advanced based on information received. Nastec will decide if the product is to be replaced under warranty. However, Nastec reserves the right to inspect the product.
  - Need to receive the product by the manufacturer in order to establish the potential warranty. Following the analysis of the returned product, Nastec will establish the unquestionable existence or absence of the warranty conditions by providing a detailed report on the damage found and its origins. If the warranty is applicable, Nastec will repair the device. Nastec is willing to refurbish the product upon offer. In the absence of a warranty, Nastec will make an offer to repair and/or refurbish the device. After 60 days from the offer, if no response is received from the buyer, Nastec will scrap the product upon notice. Nastec does not cover any warranties provided by the buyer to third parties, without its prior authorization.

3.3. Product registration

By registering the product on the portal service.nastec.eu, it is possible to activate the manufacturer's warranty valid for 24 months from the registration date up to a maximum of 36 months from the date of manufacture, according to the warranty conditions. Registration must be completed within one month from the date of installation of the product.

The warranty is offered through the distribution chain. It is therefore necessary to specify the official distributor or importer from which the product was purchased. Alternatively, the distributor can register the product in the customer's name.

3.4. Spare parts

The manufacturer provides spare parts for the device. Contact your dealer for more information.

WARNING
It is recommended to use only original spare parts.

WARNING
Failure to follow the instructions may result in damage to the product, the system in which it is installed and, in the worst cases, damage to property or persons with even fatal consequences.

WARNING
Failure to comply with the instructions may lead to loss of warranty.

3.5. Disassembly and repair

If it is necessary to disassemble and repair the device, it is recommended that the safety instructions be strictly observed.

WARNING
The installation, use and maintenance of the product are strictly for qualified personnel who have undergone appropriate training. Any use by unqualified personnel must be carried out under the approval, responsibility, and close monitoring of the latter.

WARNING
Failure to follow the instructions may result in damage to the product, the system in which it is installed and, in the worst cases, damage to property or persons with even fatal consequences.

WARNING
Failure to comply with the instructions may lead to loss of warranty.

TIP
For more information contact the dealer or technical support at service@nastec.eu or by opening a support ticket on the portal service.nastec.eu

3.6. Disposal

Devices marked with this symbol cannot be disposed of in household waste but must be disposed of at appropriate waste drop-off centres. It is recommended to contact the Waste Electrical and Electronic Equipment drop-off centres (WEEE) in the area. If not disposed of properly, the product may have potential harmful effects on the environment and on human health due to certain substances present within. Illegal or incorrect disposal of the product is subject to severe administrative and/or criminal penalties.

4. Transport and storage

4.1. Transport

Avoid subjecting the product to severe shocks or extreme weather conditions during transport. The packaging must remain dry and at a temperature between -20°C (-4°F) and +70°C (+158°F). Do not stack packages without first checking feasibility with the manufacturer.

TIP
It is advisable to always indicate FRAGILE on the packaging

4.2. Inspection on delivery

Upon receipt of the product, check:

- the integrity of the packaging
- the integrity of the content
- the presence of all components

In case of problems, notify the forwarder immediately.

WARNING
The manufacturer declines all responsibility for damage to the product due to transport

4.3. Handling

The product must be handled by hand or using suitable lifting equipment in relation to its weight and the regulations in force.

If necessary, use dedicated handling equipment (cranes, ropes, trolleys), using the lifting points provided in the product.

During handling it is recommended to:

- Handle with care
- keep away from suspended loads
- always wear accident prevention equipment
- be careful not to damage electrical cables

Do not handle the product using electrical cables as lifting gear.

WARNING
Failure to follow the instructions may result in damage to the product, the system in which it is installed and, in the worst cases, damage to property or persons with even fatal consequences.

4.4. Storage

The product must be stored in its packaging in a dry place, without sudden changes in humidity and temperature and protected from mechanical (weights, vibrations), thermal and chemical agents.

The temperature of the storage environment must be between -20°C (-4°F) and 70°C (+158°F) with a maximum relative humidity of 85% (non-condensing).

If the product remains in stock for more than 24 months from the manufacturing date shown on the packaging, it is necessary to check the mechanical integrity of its parts and supply power to it at least once every 12 months.

If the product is put back into storage after it has been used, it is advisable to contact the manufacturer for further information on storage.

TIP
For more information contact the dealer or technical support at service@nastec.eu or by opening a support ticket on the portal service.nastec.eu

5. Technical features

5.1. Name

VABCD - EFGH

- **V**: Product name
- **A**: Nominal AC supply voltage (2 =1x230 VAC, 3 = 3x230 VAC, 4 = 3x400 VAC)
- **BCD** Rated output current
- **EF**: Customization code (01 = standard customization)
- **G**: Mounting kit included in the package (0 = none, 1 = motor, 2 = wall, 3 = motor+wall)
- **H**: Pressure sensor included in the package (0 = none, 1 = pressure sensor 0-16 bar)

5.2. Technical Data

Electrical specifications by model:

Model	Vin +/- 15% [VAC]	Max V out [VAC]	Max I in [A]	Max I out [A]	Typical motor P2 [kW]	Maximum efficiency [%]	Size
V209	1 x 230	1 x Vin	15	9	1,1	95	1
		3 x Vin		7	1,5		
V214	1 x 230	1 x Vin	20	9	1,1	95	1

Model	Vin +/- 15% [VAC]	Max V out [VAC]	Max I in [A]	Max I out [A]	Typical motor P2 [kW]	Maximum efficiency [%]	Size
		3 x Vin		11	3		
V218	1 x 230	3 x Vin	38	18	4	95	2
V225	1 x 230	3 x Vin	53	25	5,5	95	2
V306	3 x 230	3 x Vin	5,4	6	1,1	97	1
V309	3 x 230	3 x Vin	8	9	2,2	97	1
V314	3 x 230	3 x Vin	13,5	14	3	97	2
V318	3 x 230	3 x Vin	17,5	18	4	97	2
V325	3 x 230	3 x Vin	24	25	5,5	97	2
V330	3 x 230	3 x Vin	29	30	7,5	97	2
V338	3 x 230	3 x Vin	42	38	9,2	98	3
V348	3 x 230	3 x Vin	52	48	11	98	3
V365	3 x 230	3 x Vin	68	65	15	98	3
V375	3 x 230	3 x Vin	78	75	18,5	98	3
V385	3 x 230	3 x Vin	88	85	22	98	3
V3118	3 x 230	3 x Vin	120	118	30	98	3
V3158	3 x 230	3 x Vin	160	158	37	98	4
V3185	3 x 230	3 x Vin	190	185	45	98	4
V3215	3 x 230	3 x Vin	220	215	55	98	4
V3268	3 x 230	3 x Vin	270	268	75	98	4
V406	3 x 380 - 460	3 x Vin	5,4	6	2,2	97	1
V409	3 x 380 - 460	3 x Vin	8	9	4	97	1
V414	3 x 380 - 460	3 x Vin	13,5	14	5,5	97	2
V418	3 x 380 - 460	3 x Vin	17,5	18	7,5	97	2
V425	3 x 380 - 460	3 x Vin	24	25	11	97	2
V430	3 x 380 - 460	3 x Vin	29	30	15	97	2
V438	3 x 380 - 460	3 x Vin	42	38	18,5	98	3
V448	3 x 380 - 460	3 x Vin	52	48	22	98	3
V465	3 x 380 - 460	3 x Vin	68	65	30	98	3
V475	3 x 380 - 460	3 x Vin	78	75	37	98	3
V485	3 x 380 - 460	3 x Vin	88	85	45	98	3
V4118	3 x 380 - 460	3 x Vin	120	118	55	98	3
V4158	3 x 380 - 460	3 x Vin	160	158	75	98	4
V4185	3 x 380 - 460	3 x Vin	190	185	90	98	4
V4215	3 x 380 - 460	3 x Vin	220	215	110	98	4
V4268	3 x 380 - 460	3 x Vin	270	268	132	98	4

General electrical specifications:

Power supply frequency	50 - 60 Hz (+/- 2%)
Voltage unbalance between the power supply phases	+/- 2%
Maximum output frequency	300 Hz
EMC compliance	EN61800-3 C2
Energy efficiency class (according to EN61800-9-2)	IE2

Environmental specifications:

Relative humidity of the operating environment	5 - 95 % non-condensing
Workplace temperature	from -10 °C (14 °F) to 60 °C (140 °F)
Maximum workplace temperature at nominal load	40°C (104 °F)
Power derating beyond maximum temperature	-2.5% every °C (-1.4% every °F)
Maximum altitude at nominal load	1000 m (3280 ft)
Power derating beyond maximum altitude	- 1% every 100 m (328 ft)

Mechanical specifications:

Protection rating	IP55 (NEMA 4) IP54 (NEMA 12) sizes 3 & 4
Resistance to vibrations	EN60068-2-6:2008, EN60068-2-27:2009, EN60068-2-64:2008,

WARNING
Protect the device from direct exposure to weather and sunlight.

5.3. Dimensions and weight

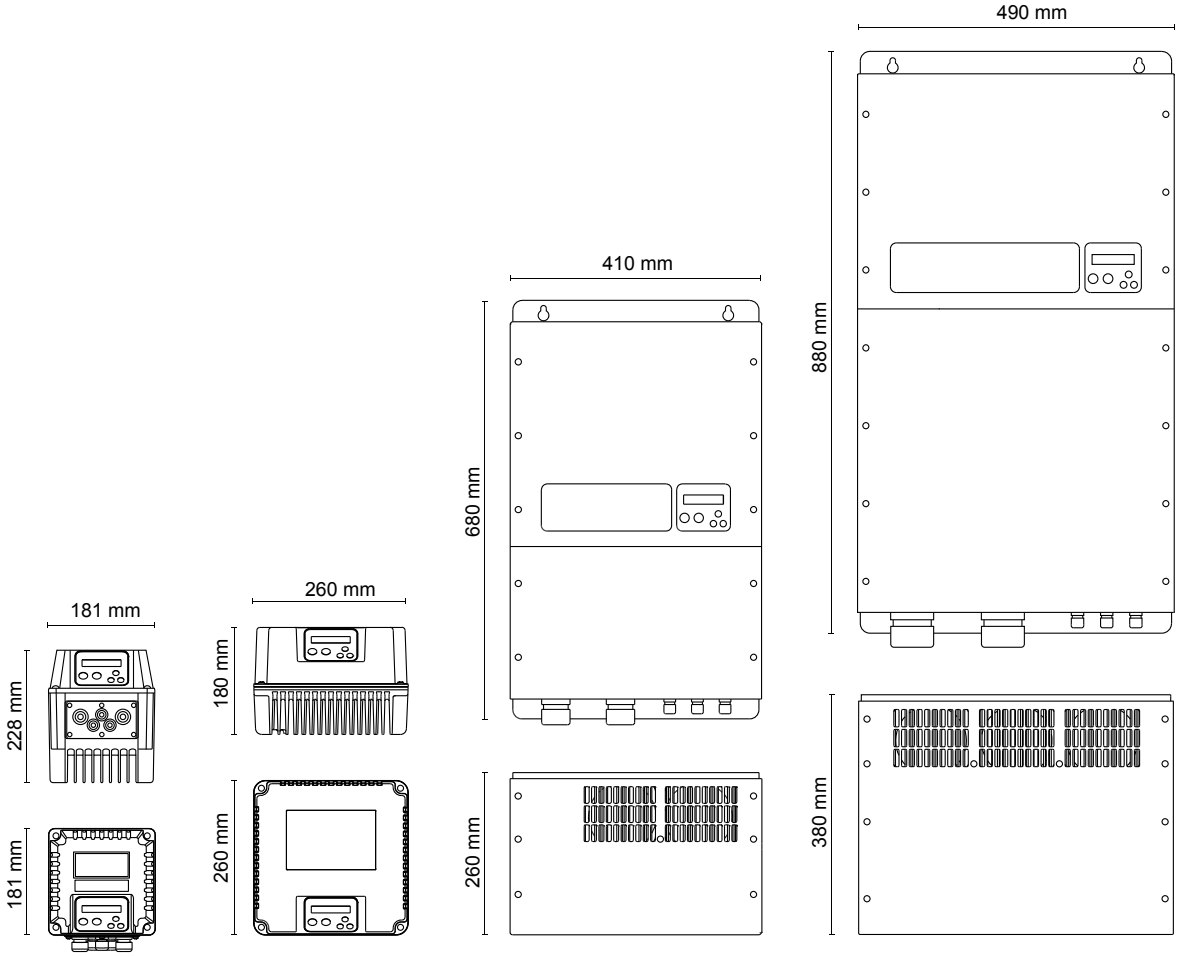

Size	Maximum weight [kg]
1	5
2	9
3	40
4	80

5.4. Cables entry

Cable gland	Tightening torque [Nm]	Cable diameter [mm]	Size 1	Size 2	Size 3	V3118 , V4118	Size 4	V3215 , V3268 , V4215 , V4268
M12	1,5	3,5-7	3	-	9	9	9	9
M16	3	5-10	-	4	-	-	-	-
M20	6	7-13	2	-	-	-	-	-
M25	8	10-17	-	2	-	-	-	-
M40	13	19 -28	-	-	2	-	-	-
M50	15	27 -35	-	-	-	2	-	-
M63	16	34 -45	-	-	-	-	2	-

Cable gland	Tightening torque [Nm]	Cable diameter [mm]	Size 1	Size 2	Size 3	V3118 , V4118	Size 4	V3215 , V3268 , V4215 , V4268
M75	30	58 – 68	-	-	-	-	-	2

6. Mechanical installation

WARNING
Read the safety chapter carefully before continuing.

6.1. Installation environment

WARNING
The environmental specifications stated in the technical data of the product must be strictly complied with.

WARNING
Do not install the device in environments at a risk of explosion, flooding, or in the presence of flammable fluids or solids. Ensure sufficient ventilation in the room.

Refer to local regulations when selecting the appropriate installation location.

WARNING
The degree of protection of the device is only ensured if, at the end of the installation, the cover screws and the cable glands have been properly tightened. Close the holes of unused cable glands with the appropriate plugs.

Protect the device from direct exposure to weather and sunlight.

Do not leave the device installed without cover or with the cable glands open, even if not connected to the power supply. The infiltration of dust, water or humidity may irreparably damage the device.

WARNING
To ensure uninterrupted operation, the device can gradually and automatically reduce performance before shutting down following over-temperature. However, prolonged operation above the rated temperature leads to a reduction in the life of the device.

6.2. Cooling

The device is cooled primarily by forced air circulation through the heat sink element.

In addition to the heat sink, the device also uses the remaining surfaces to cool itself. It is therefore necessary to ensure sufficient space around the device during installation.

In particular, the distance between the suction and discharge side of the heat sink and the other surfaces must be at least:

- 150 mm for current intensity up to 18 A
- 200 mm for current intensity up to 30 A
- 250 mm for current intensity up to 118 A
- 300 mm for current intensity up to 268 A

On the other sides, maintain a minimum distance of 100 mm to ensure cooling and to make installation and maintenance operations easier.

	During operation, the surfaces of the device can become hot enough to cause burns. Do not touch them.

In the case of installation inside electric cabinet, it is necessary to guarantee the appropriate air flow for the heat dissipation of all the components. The heat released by the device may be calculated from its conversion efficiency.

WARNING
Do not place any heat-generating elements (outlet filters) on the suction side of the device to prevent dangerous overheating.

6.3. Installation on the motor fan cover

The device is installed on the motor fan cover and fastened using the four hooks supplied in the relative motor kit.

WARNING
When the device is installed on the motor fan cover, cooling is ensured by the motor fan. It is therefore necessary to remove the fans used for wall installation.

WARNING
Installation on the motor fan cover is only possible with motors equipped with a metal fan cover screwed to the motor rather than interlocked to it.

Motor kit for size 1 devices

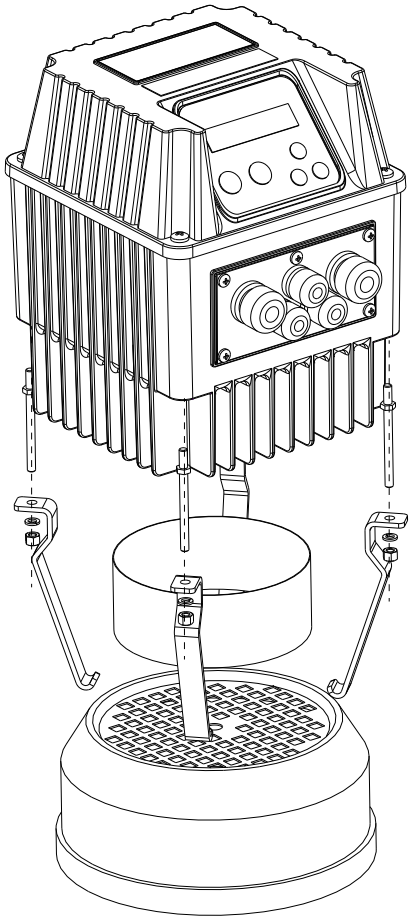

The kit includes:

- No. 4 M5 studs, nuts and grower washers.
- No 4 hooks for fastening to the motor fan cover.
- No. 1 conveyor ring.

NOTE
The conveyor ring allows optimal cooling by accelerating the flow of air in the heat sink area where the power electronic components are installed.

Motor kit for size 2 devices

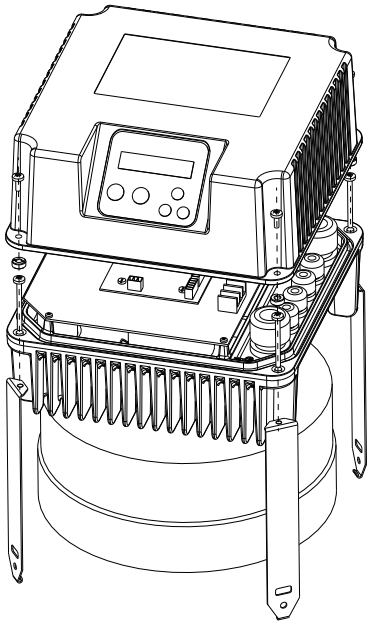

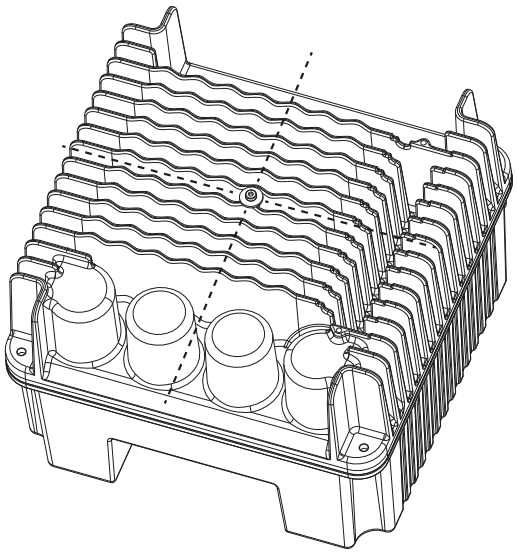

The kit includes:

- No. 4 M5x50 screws.
- No 4 hooks for fastening to the motor fan cover.
- No 1 centering pin on the motor fan cover.

6.4. B35 motor-side assembly

This type of assembly is only possible with IEC motors in version B35 (with motor flange and feet), using the appropriate motor kit.

The cooling of the device is ensured by the ventilation system of the device itself.

Figure 1. Motor kit for size 3 devices

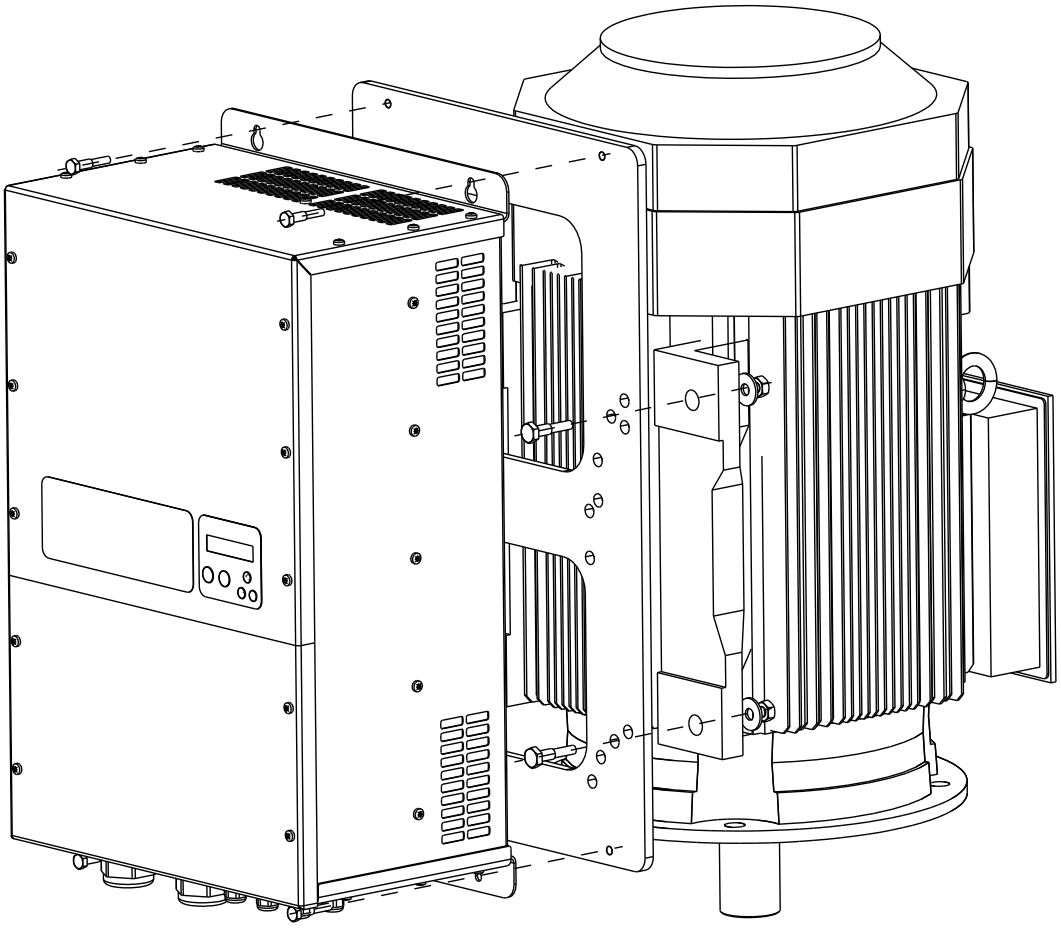

The motor kit includes:

- No. 1 adapter flange for MEC160,180,200,225 motors.
- No. 4 M8 screws.
- No. 4 M10 screws, nuts and washers.

6.5. Wall installation

The device is installed on the wall and cooled by the ventilation system supplied in the special wall kit.

Wall kit for size 1 devices

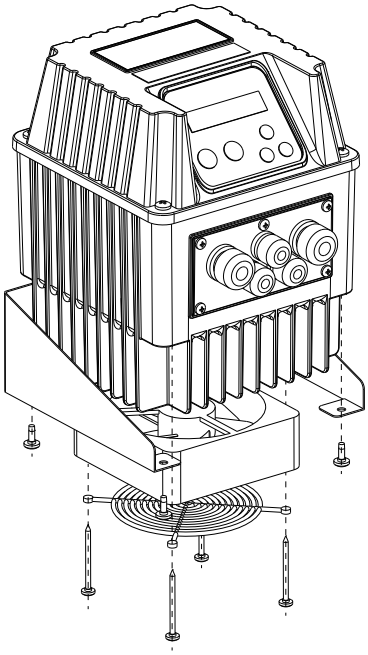

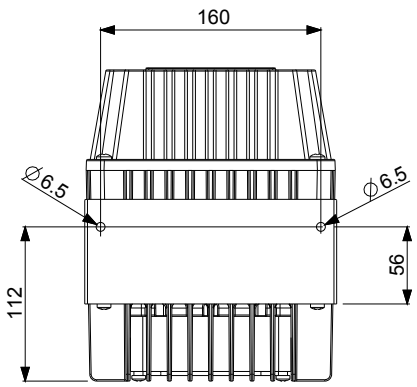

The kit includes:

- No. 1 230 VAC (V209, V214) or 12 VDC V306, V309, V406, V409) fan.
- No. 4 screws for fastening the fan.
- No. 1 protection grille.
- No. 4 screws for fastening the support to the wall.

Wall kit for size 2 devices

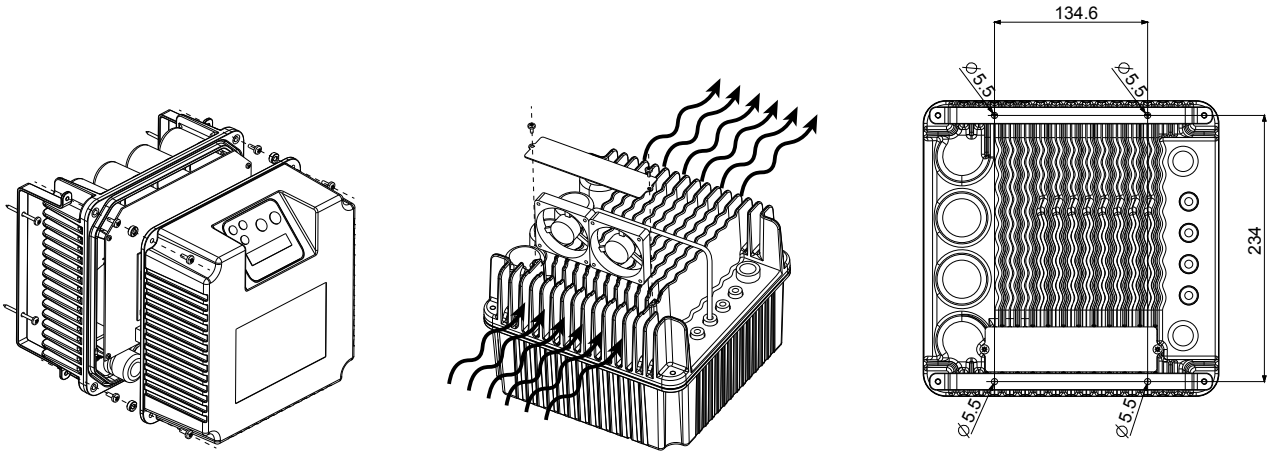

The kit includes:

- No. 2 12 VDC fans. To ensure that the unit cools down correctly, respect the flow direction indicated in the figure when assembling the fans.
- No. 1 fan cover
- No. 2 screws for fastening the fan cover to the heat sink.
- No. 2 wall fastening brackets with relative template.
- No 4 M5 screws for fastening the device to the brackets.

Wall installation for size 3 devices

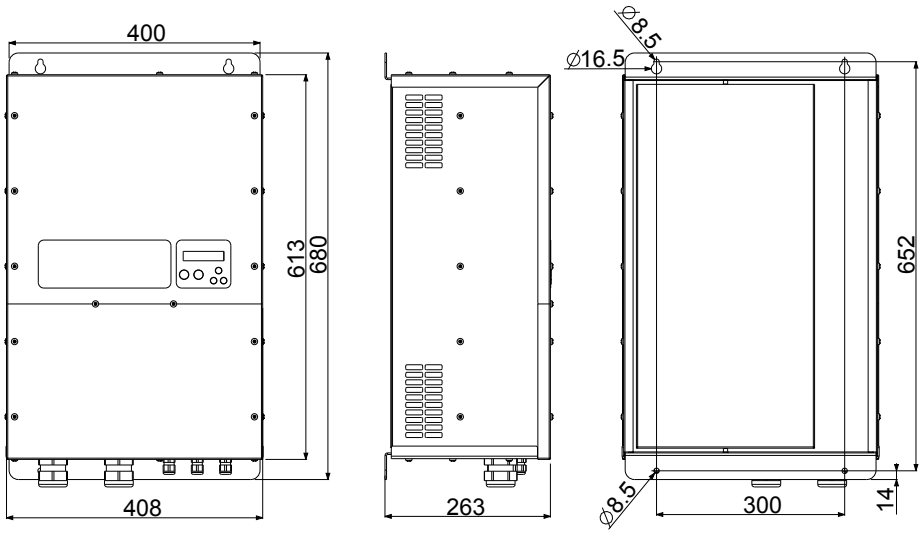

Wall installation for size 4 devices

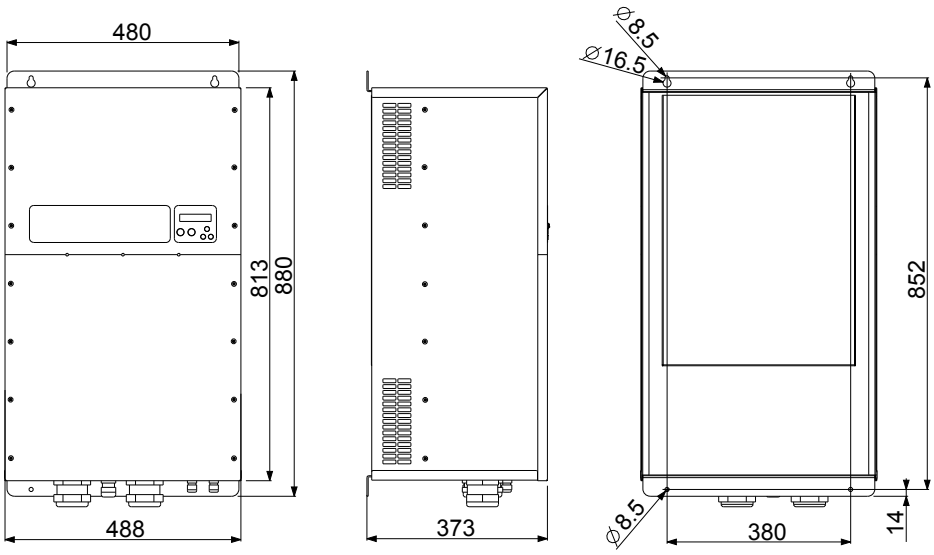

7. Electrical installation

WARNING
Read the safety chapter carefully before continuing.

7.1. Grounding

DANGER
Make sure that the device and the loads connected to it are properly grounded with the appropriate connection terminals before commissioning.

Ensure that the grounding system is compliant and refer to local regulations for grounding devices.

Each load must be fitted with its own earthing cable, the length of which must be as short as possible. Do not make interconnected grounding connections.

Leakage currents may exceed 3.5 mA. It is recommended to use the reinforced ground connection if necessary.

Use the following minimum cross-sections for ground cables:

- cross-section equal to the mains power cable cross-section up 16 mm^2. (6 AWG)
- 16 mm2 (6 AWG) for mains power cable cross-section between 16 mm^2 (6 AWG) and 35 mm^2 (1 AWG).
- cross-section equal to half the cross-section of the power supply cable when the latter is greater than 35 mm^2 (1 AWG).

7.2. Protection devices

DANGER
It is recommended to install the appropriate protection devices upstream of the device, such as a circuit breakers, fuses and a residual current device (RCD).

Fuses and switches.

The control device can protect the motor from overloads by digitally controlling the absorbed current against the set rated current.

It is therefore not necessary to install any overload protection device between the inverter and the motor.

Instead, it is necessary to install overcurrent and short-circuit protection devices, such as fuses and circuit breakers, upstream of the device. These trigger in the event of failure of a component inside the device.

Supply voltage	Model	Recommended fuse gC	Recommended circuit breaker
1 x 230 VAC	V209	20	ABB MCB S201-C20
1 x 230 VAC	V214	25	ABB MCB S201-C25
1 x 230 VAC	V218	40	ABB MCB S201-C40
1 x 230 VAC	V225	63	ABB MCBS201-C63
3 x 230 VAC	V306	10	ABB MCB S203-C10
3 x 230 VAC	V309	16	ABB MCB S203-C16
3 x 230 VAC	V314	20	ABB MCBS203-C20
3 x 230 VAC	V318	25	ABB MCB S203-C25
3 x 230 VAC	V325	30	ABB MCB S203-C32
3 x 230 VAC	V330	35	ABB MCB S203-C40
3 x 230 VAC	V338	50	ABB MCB S203-C50
3 x 230 VAC	V348	63	ABB MCB S203-C63
3 x 230 VAC	V365	80	ABB MCB S203-C80
3 x 230 VAC	V375	100	ABB MCB S203-C100
3 x 230 VAC	V385	100	ABB MCB S203-C100
3 x 230 VAC	V3118	160	SACE FORMULA 160
3 x 230 VAC	V3158	200	SACE FORMULA 200
3 x 230 VAC	V3185	200	SACE FORMULA 200
3 x 230 VAC	V3215	250	SACE FORMULA 250
3 x 230 VAC	V3268	315	SACE FORMULA 320
3 x 380 - 460 VAC	V406	10	ABB MCBS203-C10
3 x 380 - 460 VAC	V409	16	ABB MCBS203-C16
3 x 380 - 460 VAC	V414	20	ABB MCBS203-C20
3 x 380 - 460 VAC	V418	25	ABB MCBS203-C25
3 x 380 - 460 VAC	V425	30	ABB MCBS203-C32
3 x 380 - 460 VAC	V430	35	ABB MCBS203-C40
3 x 380 - 460 VAC	V438	50	ABB MCBS203-C50
3 x 380 - 460 VAC	V448	63	ABB MCBS203-C63
3 x 380 - 460 VAC	V465	80	ABB MCBS203-C80
3 x 380 - 460 VAC	V475	100	ABB MCBS203-C100
3 x 380 - 460 VAC	V485	100	ABB MCBS203-C100
3 x 380 - 460 VAC	V4118	160	SACE FORMULA 160
3 x 380 - 460 VAC	V4158	200	SACE FORMULA 200
3 x 380 - 460 VAC	V4185	200	SACE FORMULA 200
3 x 380 - 460 VAC	V4215	250	SACE FORMULA 250
3 x 380 - 460 VAC	V4268	315	SACE FORMULA 320

Residual Current Devices (RCD)

For inverter devices with single-phase power supply, use AC-sensitive RCD devices of both sine and pulse types. The devices listed are, in order of priority:

- type F, marked with the symbols capable of detecting high-frequency currents up to 1 kHz.
- type A-APR, marked with the symbols characterized by a slight intervention delay.
- type A, marked with the symbols

For inverter devices with three-phase power supply,use RCD devices that are sensitive to both alternating and direct current. The following are suitable devices:

- Type B, marked with the symbols

7.3. Connecting cables

WARNING
The connecting cables must comply with local regulations, feature the appropriate cross-section, and meet the requirements for voltage, current, and temperature.

7.3.1. Power cables

Model	Maximum cross-section of the input cable with ground	Maximum cross-section of the output cable with ground	Cable tightening torque [Nm]	Ground cable tightening torque
V209	3 x 2,5 mm^2	4 x 2,5 mm^2	1	1
V214	3 x 2,5 mm^2	4 x 2,5 mm^2	1	1
V218	3 x 6 mm^2	4 x 6 mm^2	1	3
V225	3 x 6 mm^2	4 x 6 mm^2	1,5	3
V306	4 x 2,5 mm^2	4 x 2,5 mm^2	1	1
V309	4 x 2,5 mm^2	4 x 2,5 mm^2	1	1
V314	4 x 6 mm^2	4 x 6 mm^2	1	3
V318	4 x 6 mm^2	4 x 6 mm^2	1	3
V325	4 x 6 mm^2	4 x 6 mm^2	1,5	3
V330	4 x 6 mm^2	4 x 6 mm^2	1,5	3
V338	4 x 16 mm^2	4 x 16 mm^2	3	3
V348	4 x 16 mm^2	4 x 16 mm^2	3	3
V365	4 x 35 mm^2	4 x 35 mm^2	4	4
V375	4 x 35 mm^2	4 x 35 mm^2	4	4
V385	4 x 35 mm^2	4 x 35 mm^2	4	4
V3118	4 x 35 mm^2	4 x 35 mm^2	4	4
V3158	4 x 50 mm^2	4 x 50 mm^2	20	20
V3185	4 x 50 mm^2	4 x 50 mm^2	20	20
V3215	4 x 95 mm^2	4 x 95 mm^2	20	20
V3268	4 x 95 mm^2	4 x 95 mm^2	20	20
V406	4 x 2,5 mm^2	4 x 2,5 mm^2	1	1
V409	4 x 2,5 mm^2	4 x 2,5 mm^2	1	1
V414	4 x 6 mm^2	4 x 6 mm^2	1	3
V418	4 x 6 mm^2	4 x 6 mm^2	1	3
V425	4 x 6 mm^2	4 x 6 mm^2	1,5	3
V430	4 x 6 mm^2	4 x 6 mm^2	1,5	3
V438	4 x 16 mm^2	4 x 16 mm^2	3	3
V448	4 x 16 mm^2	4 x 16 mm^2	3	3
V465	4 x 35 mm^2	4 x 35 mm^2	4	4
V475	4 x 35 mm^2	4 x 35 mm^2	4	4
V485	4 x 35 mm^2	4 x 35 mm^2	4	4
V4118	4 x 35 mm^2	4 x 35 mm^2	4	4
V4158	4 x 50 mm^2	4 x 50 mm^2	20	20
V4185	4 x 50 mm^2	4 x 50 mm^2	20	20
V4215	4 x 95 mm^2	4 x 95 mm^2	20	20
V4268	4 x 95 mm^2	4 x 95 mm^2	20	20

WARNING
Use unshielded cables for input cables and shielded cables for output cables.

WARNING
Always use cables with appropriate cable lugs, which may be supplied with the product.

WARNING
For motor cable lengths greater than 5 meters, the use of special output filters, available on request, is recommended.

7.3.2. Control cables

Model	Maximum cross-section of the control cables	Tightening torque [Nm]
Control terminals of all models	1 mm^2	0,5

WARNING
Use shielded cable for control cables.

WARNING
Always use cables with appropriate cable lugs, which may be supplied with the product.

7.4. Electromagnetic Compatibility (EMC)

The device meets the requirements of electromagnetic compatibility according to the EN61800-3 standard. However, to ensure the electromagnetic compatibility of the system in which it is installed, it is necessary:

- use ground connection cables that are as short as possible.
- use motor cables that are as short as possible and shielded, with the shield connected at both ends.
- use shielded signal cables with the shield connected at one end only.

WARNING
Install signal, motor, and power cables separately from each other at a distance of at least 30 cm. If the signal cables meet the power cables, cross them perpendicularly.

WARNING
It is possible to remove the connection of the filter capacitors Cy to the ground by removing the screws marked with the EMC symbol. In this way, the ground leakage currents caused by the filter are reduced, but the intrinsic EMC compatibility of the device is no longer valid and must therefore be guaranteed externally in another way.

7.5. Electrical connections

7.5.1. Power connections

V209 , V214

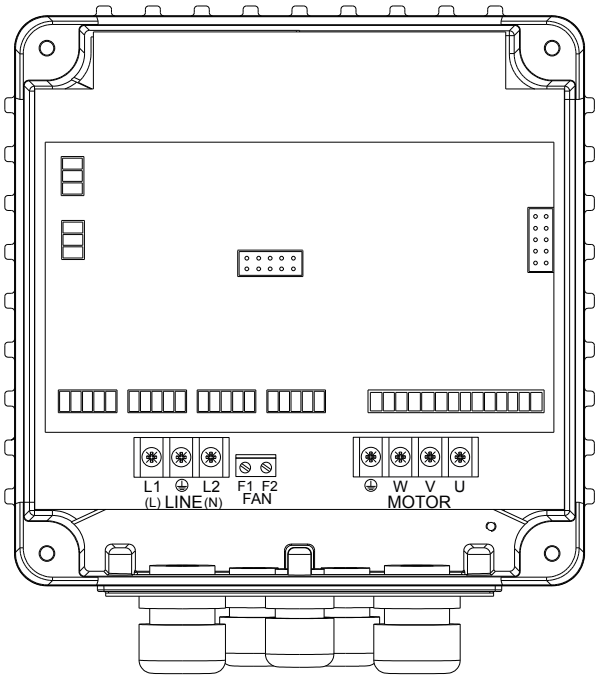

		A [mm]	Pre-insulated cable lug	Stripping diagram
Power Supply **LINE**	**L1/L**	35	Fork for M4 screw	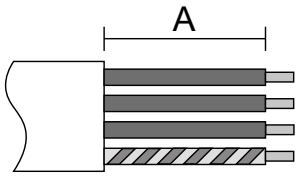
	L2/N	35	Fork for M4 screw	
	P.E. ⏚	35	Fork for M4 screw	
Motor **MOTOR**	**U**	35	Fork for M4 screw	
	V	35	Fork for M4 screw	
	W	35	Fork for M4 screw	
	P.E. ⏚	35	Fork for M4 screw	

NOTE
When connecting a single-phase PSC motor (capacitor permanently inserted), connect the start to phase U and the common to phase V, leaving phase W unconnected.

NOTE
The FAN terminal: F1, F2 powers the 230 VAC auxiliary fan supplied in the wall kit.

V218 , V225

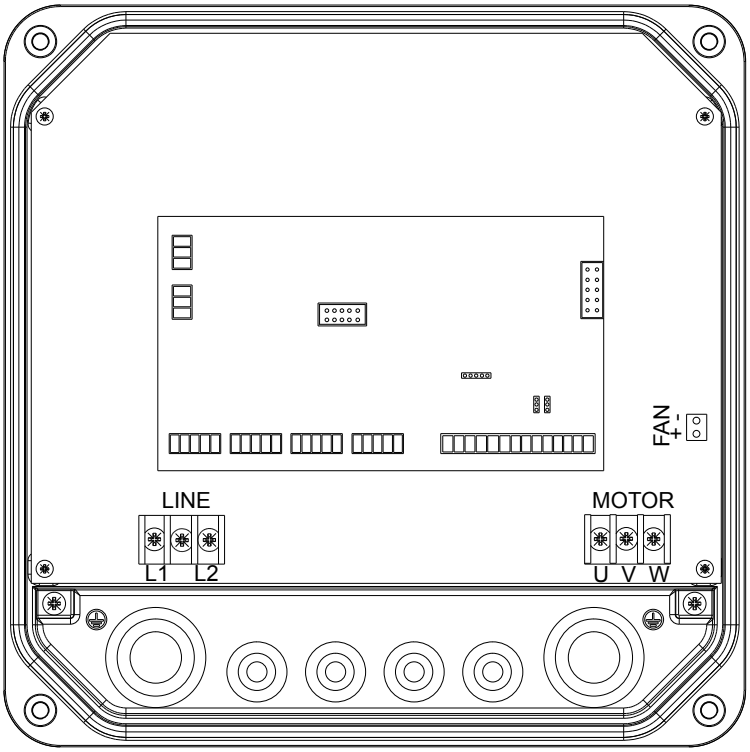

		A [mm]	Pre-insulated cable lug	Stripping diagram
Power Supply **LINE**	**L1/L**	50	Fork for M4 screw	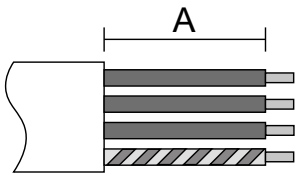
	L2/N	50	Fork for M4 screw	
	P.E. ⏚	100	Eyelet for M4 screw	
Motor **MOTOR**	**U**	50	Fork for M4 screw	
	V	50	Fork for M4 screw	
	W	50	Fork for M4 screw	
	P.E. ⏚	100	Eyelet for M4 screw	

NOTE
The VENT terminal: -, + powers the 12 VDC auxiliary fans supplied in the wall kit.

V306 , V309 , V406 , V409

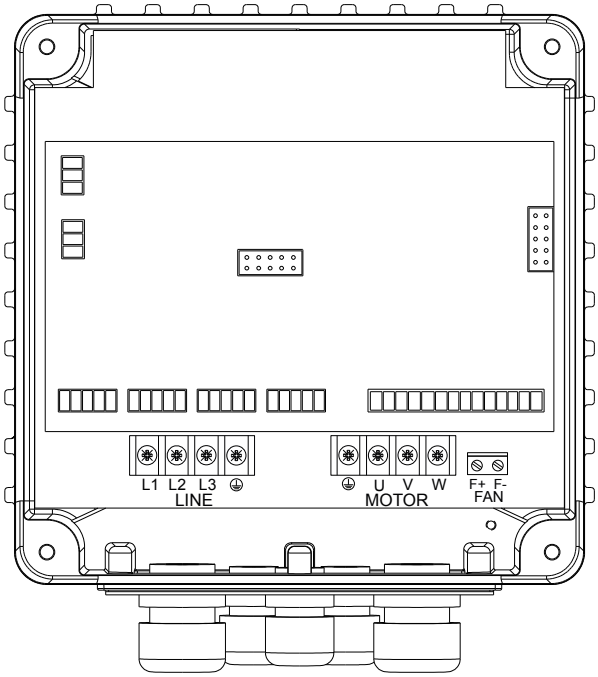

		A [mm]	Pre-insulated cable lug	Stripping diagram
Power Supply **LINE**	**L1**	50	Fork for M4 screw	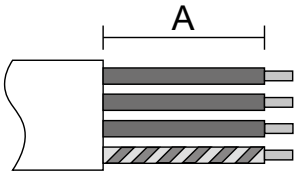
	L2	50	Fork for M4 screw	
	L3	50	Fork for M4 screw	
	P.E. ⏚	50	Fork for M4 screw	
Motor **MOTOR**	**U**	50	Fork for M4 screw	
	V	50	Fork for M4 screw	
	W	50	Fork for M4 screw	
	P.E. ⏚	50	Fork for M4 screw	

NOTE
The FAN terminal: F +, F- powers the 12 VDC auxiliary fan supplied in the wall kit.

V314 , V318 , V414 , V418

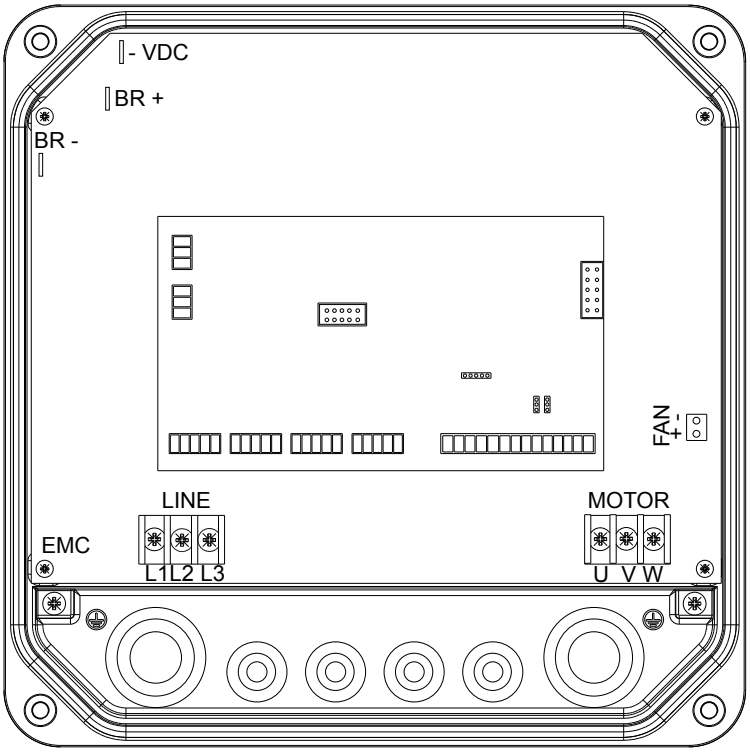

		A [mm]	Pre-insulated cable lug	Stripping diagram
Power Supply **LINE**	**L1**	50	Fork for M4 screw	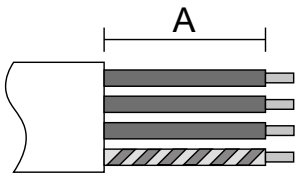
	L2	50	Fork for M4 screw	
	L3	50	Fork for M4 screw	
	P.E. ⏚	100	Eyelet for M4 screw	
Motor **MOTOR**	**U**	50	Fork for M4 screw	
	V	50	Fork for M4 screw	
	W	50	Fork for M4 screw	
	P.E. ⏚	100	Eyelet for M4 screw	

NOTE
The VENT terminal: -, + powers the 12 VDC auxiliary fans supplied in the wall kit.

V325 , V330 , V425 , V430

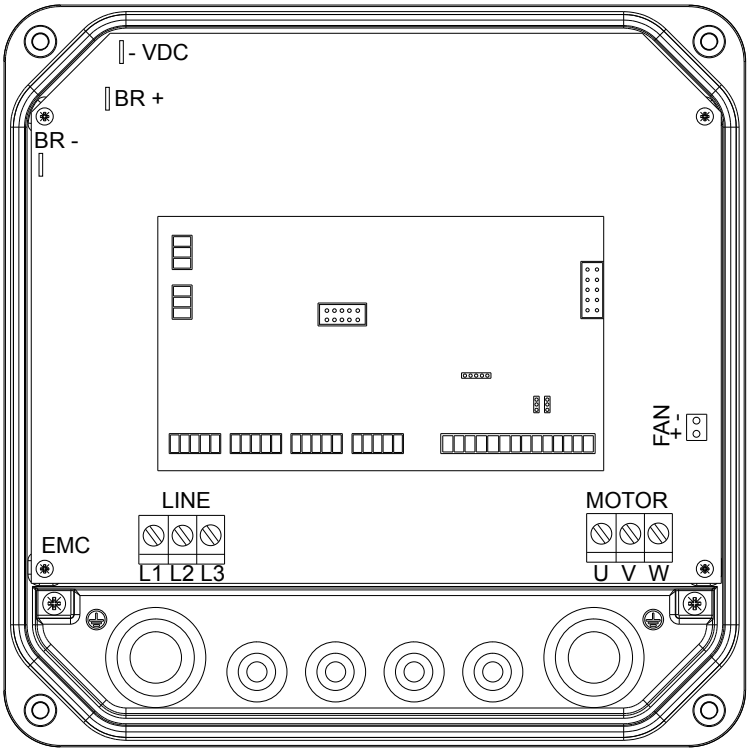

		A [mm]	Pre-insulated cable lug	Stripping diagram
Power Supply **LINE**	**L1**	50	Tip	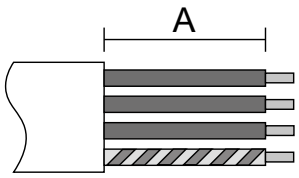
	L2	50	Tip	
	L3	50	Tip	
	P.E. ⏚	100	Eyelet for M4 screw	
Motor **MOTOR**	**U**	50	Tip	
	V	50	Tip	
	W	50	Tip	
	P.E. ⏚	100	Eyelet for M4 screw	

NOTE
The VENT terminal: -, + powers the 12 VDC auxiliary fans supplied in the wall kit.

V338 , V348 , V365 , V375 , V385 , V318 , V438 , V448 , V465 , V475 , V485 , V4118

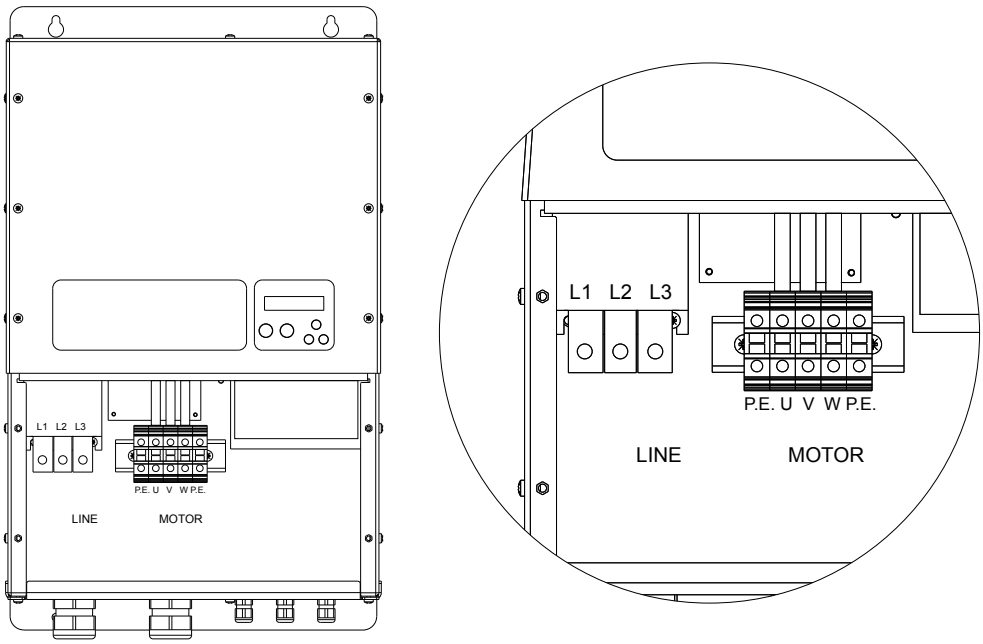

		A [mm]	Pre-insulated cable lug	Stripping diagram
Power Supply **LINE**	**L1**	140	Tip	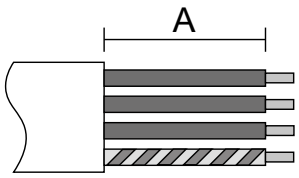
	L2	140	Tip	
	L3	140	Tip	
	P.E. ⏚	140	Tip	
Motor **MOTOR**	**U**	140	Tip	
	V	140	Tip	
	W	140	Tip	
	P.E. ⏚	140	Tip	

V3158 , V3185 , V3215 , V3268 , V4158 , V4185 , V4215 , V4268

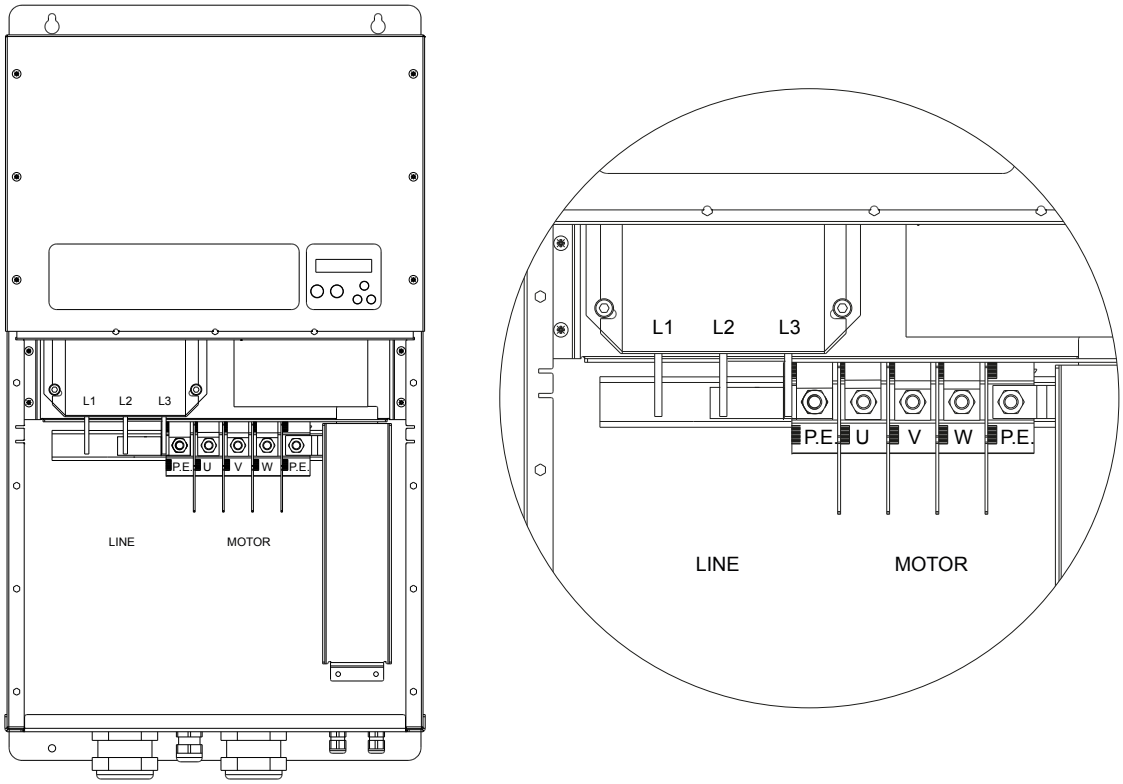

		A [mm]	Pre-insulated cable lug	Stripping diagram
Power Supply **LINE**	**L1**	360	Eyelet for M10 screw	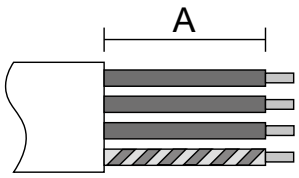
	L2	360	Eyelet for M10 screw	
	L3	360	Eyelet for M10 screw	
	P.E. ⏚	360	Eyelet for M10 screw	
Motor **MOTOR**	**U**	360	Eyelet for M10 screw	
	V	360	Eyelet for M10 screw	
	W	360	Eyelet for M10 screw	
	P.E. ⏚	360	Eyelet for M10 screw	

7.5.2. Control connections

The control board is common for all models.

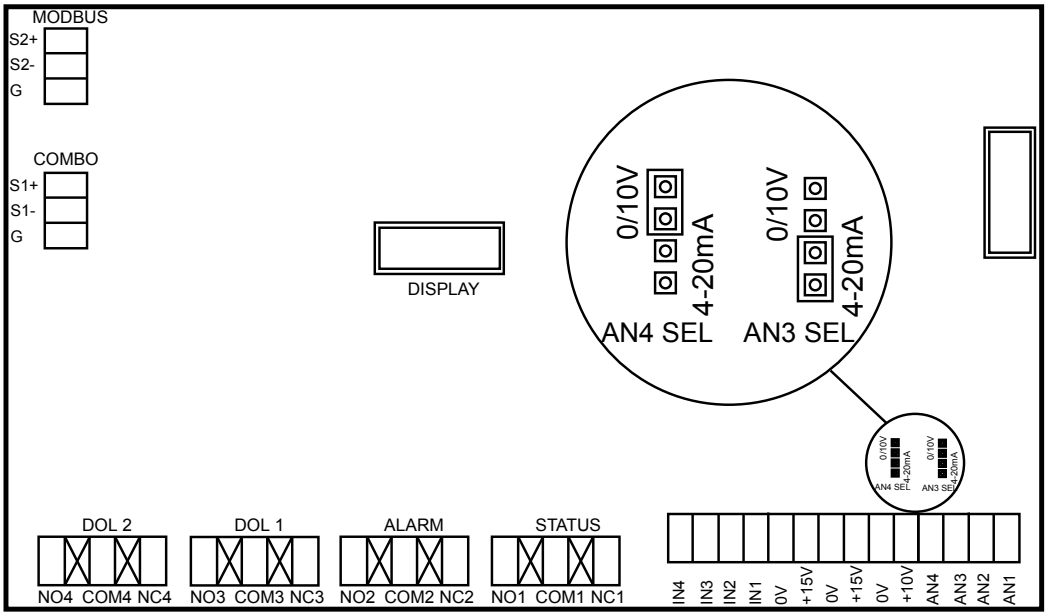

Type		Description	Functionality	Comments
Analog inputs	AN1	4-20 mA	Sensor 1	-
	AN2	4-20 mA	Sensor 2	-
	AN3	4-20 mA 0-10 V	External set value	Configurable as 4-20 mA or 0-10V via jumper.
	AN4	4-20 mA 0-10 V	External frequency External set value 2	Configurable as 4-20 mA or 0-10V via jumper.
Power Supply	+15V	15 VDC, max 100 mA	Power supply for 4-20 mA analog inputs	Do not use as a power supply for the digital inputs!
Power Supply	+10V	10 VDC, max 3 mA	Power supply for 0-10 V analog inputs	Do not use as a power supply for the digital inputs!
Signal GND	0V	Insulated	Signal GND for analog and digital inputs	-
Digital inputs	IN1	Active low	Motor start and stop	Programmable as Normally Open or Normally Closed.
	IN2	Active low	Motor start and stop Switching of set value 1 and 2 Switching of work frequency 1 and 2	Programmable as Normally Open or Normally Closed.
	IN3	Active low	Motor start and stop Switching of sensors 1 and 2	Programmable as Normally Open or Normally Closed.
	IN4	Active low	Alarms reset Motor start and stop Switch between main and auxiliary control modes	Programmable as Normally Open or Normally Closed.
Relay outputs	NO1	Normally Open	STATUS relay NO1, COM1: closed contact with motor running. NC1, COM1: closed contact with motor stopped.	Potential-free contacts Max 250 VAC, 2 A Max 30 VDC, 2 A
	COM 1	Common		
	NC1	Normally Closed		
Relay outputs	NO2	Normally Open	ALARM relay NO2, COM2: closed contact without alarm. NC2, COM2: closed contact with alarm or without power supply.	Potential-free contacts Max 250 VAC, 2 A Max 30 VDC, 2 A
	COM 2	Common		
	NC2	Normally Closed		

Type		Description	Functionality	Comments
Relay outputs	NO3	Normally Open	DOL1 Relay NO3, COM3: contact closed to start the DOL1 pump. NC3, COM3: contact open to start the DOL1 pump.	Potential-free contacts Max 250 VAC, 2 A Max 30 VDC, 2 A
	COM 3	Common		
	NC3	Normally Closed		
Relay outputs	NO4	Normally Open	DOL2 Relay NO4, COM4: contact closed to start the DOL2 pump. NC4, COM4: contact open to start the DOL2 pump.	Potential-free contacts Max 250 VAC, 2 A Max 30 VDC, 2 A
	COM 4	Common		
	NC4	Normally Closed		
RS485 serial port	S1+	Positive	Communication COMBO	-
	S1-	Negative		-
	G	Serial GND		The serial GND is isolated from the signal GND
RS485 serial port	S2+	Positive	Communication MODBUS RTU	-
	S2-	Negative		-
	G	Serial GND		The serial GND is isolated from the signal GND

8. Commissioning

8.1. Preliminary checks

Before supplying power to the device, carry out the following electrical and mechanical checks:

- Check that the device complies with the motor control according to its data plate.
- Verify proper grounding of the device, of the load, and of the entire system.
- Check the correct connection of the power supply cable and the motor cable, paying particular attention to any connection reversal.
- Check the correct connection of the power and signal cables, paying particular attention to any polarity.
- Check that the connection terminals of the power and signal cables are correctly tightened.
- Check the implementation of electromagnetic compatibility (EMC) regulations and the correct connection of cable shields.
- Check that the protective devices are present and correctly installed.
- Check that the mechanical installation is correct, sturdy and complies with environmental and cooling requirements.
- Check that the seals are intact and correctly positioned in their seats.
- Check that the cable glands and screws are properly tightened.
- Check that the device is completely closed and that live parts are not accessible.

8.2. Powering

DANGER
Before supplying power to the device, make sure you have read, understood and implemented all the safety, mechanical, and electrical installation instructions.

At the end, it shall be possible to:

- power up the device.
- verify the correct switching on and the absence of alarm messages.
- perform programming.
- start the motor.

9. Use and programming

9.1. Keyboard and display

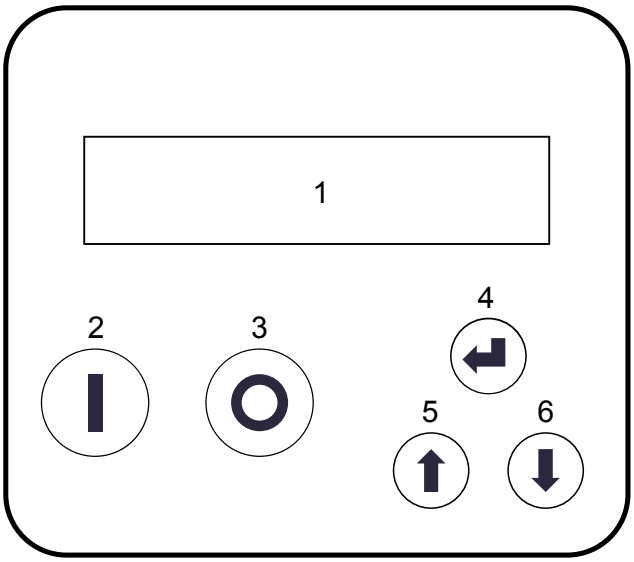

1. DISPLAY
2. START: motor start
3. STOP: motor stop / alarm reset / exit the menu
4. ENTER: access the menu / edit parameters / confirm parameters
5. +: parameter scrolling / parameter editing
6. -: parameter scrolling / parameter editing

NOTE
A confirmation acoustic signal helps the user to operate the device and provides a quick indication in case of an alarm.

9.2. Control via App

The device can be controlled using a smartphone or tablet equipped with Bluetooth BTLE connectivity and with the App Nastec NOW installed. The App is available for Android and iOS and may be downloaded, free of charge, from the respective online stores.

Through the application it is possible to:

- Monitor multiple operating parameters simultaneously.
- Obtain energy consumption statistics and check alarm history.
- Run reports with the possibility of adding notes, images and send them by e-mail or store them in the digital archive.
- Create schedules, save them in the archive, copy them to other devices, and share them among multiple users
- Control a device remotely, via Wi-Fi or GSM, using a smartphone placed nearby as a modem.
- Access manuals and additional technical documentation.
- Receive online help on parameters and alarms.

9.3. Initial set-up

The first time the device is switched on, the initial set-up is entered directly, through which it is possible to perform a quick and complete programming of the device in relation to the pump and the system in which it is installed. Failure to complete the initial set-up makes it impossible to use the device. In any case, it is possible to repeat the initial set-up at any time, for example if you decide to install the device in a new system.

The device suggests default values for each parameter. If you wish to modify the basic setting, simply press the ENTER key, wait for the parameter to start flashing and use the scroll keys. Press ENTER again to save the selected value, which therefore stops flashing.

During the initial set-up, the device control mode is automatically set to Control mode = Constant value and Unit = bar.

A detailed description of the different parameters encountered during the initial set-up is provided here below.

Parameter	Default	Description
Language XXXXXXX	English	Language of communication with the user
Unit XXXXX	bar	Units of measurement [bar,%, ft, in, cm, m, K, F, C, gpm, l / min, m3 / h, atm, psi].
Motor type XXXXXX	Threep-hase asyn.	Type of motor connected and control used: • Singlephase PSC: control for single-phase 2-wire PSC motors. • Threephase asyn.: control for three-phase asynchronous motors. • Synchronous PM: control for permanent magnet synchronous motors. • Scalar: V / f scalar control.
Rated motor Amp. I = XX.X [A]		Motor rated current according to its data plate increased by 5%. The voltage drop across the inverter may result in a current absorption greater than the motor rated current indicated on the data plate. It is necessary to check with the motor manufacturer that this overcurrent can be tolerated.
Rated motor freq f = XXX [Hz]	50	Rated frequency of the motor according to its data plate.
F.scale sensor p = XX.X [bar]	16	Full scale of the sensor.
Sensor test Press ENT		The sensor must be tested before use. If the sensor is not connected, or is incorrectly connected, pressing the ENTER button would be followed by the indication SENSOR OFF
Max alarm value p = XX.X [bar]	10	Value that can be reached in the system beyond which, even in constant frequency operating mode, the pump is stopped and an alarm signal is emitted. The pump is restarted only after the measured value has dropped below the maximum alarm value for more than 5 seconds.
Set value p = XX.X [bar]	3	Value that you want to keep constant.
Motor tuning ENT to access		If the device is "FOC-ready", motor calibration must be carried out before commissioning. **WARNING** Carefully read the chapter dedicated to the FOC motor control.
Motor test START/STOP		By using START / STOP it is possible to carry out a running test of the pump at the desired working frequency. **WARNING** Check that the pump can be started without causing damage to it or to the system.
Rotation sense ---> / <---	--->	Running direction of the motor. Should the motor run in the wrong direction, it is possible to reverse the running direction without having to change the phase sequence in the connection.
COMBO ON/OFF	OFF	Enable the function COMBO for the combined operation of several pumps in parallel. Read the dedicated chapter.
Address XX		Device address when in COMBO mode: • 0: master • 01 to 07: slave
BTLE connection ON / OFF	ON	Enable BTLE communication
Autorestart ON/OFF	OFF	By selecting ON, when the mains power is restored after a power failure, the device will return to the same state it was in before the power failure: this means that if the pump was working, it will start working again
INITIAL SETUP COMPLETED		This message informs the user that the initial set-up procedure has been successfully completed. The parameters set during this procedure are saved in the device. These values can be subsequently modified from the appropriate menus.

9.4. FOC motor control

9.4.1. Introduction

The benefits provided by the FOC (Field Oriented Control) motor control implemented in the "FOC-ready" inverters over a traditional control are as follows:

- Ideal control of the current at each operating point.

- Quick and accurate speed adjustment.
- Lower energy consumption.
- Reduction of torque fluctuations (vibrations) for smoother and more regular operation throughout the frequency range and less system noise.
- Less mechanical stress on the motor, pump and hydraulic system.

The FOC control of "FOC-ready" devices can be used with:

- Three-phase asynchronous motors
- Permanent magnet three-phase synchronous motors

The control is "sensorless" and therefore does not require the use of any sensor.

9.4.2. FOC control calibration

To enable the device to perform the FOC check it is necessary:

1. Carry out all system wiring. Connect the load (pump) to the inverter using a cable of suitable length, and any dV / dt or sine filter.
2. Power up the system and follow the initial set-up procedure specifying:
   a. Motor type: three-phase asynchronous or permanent magnet synchronous motor.
   b. Rated voltage of the motor according to its data plate.
   c. Rated frequency of the motor according to its data plate.
   d. Rated current of the motor increased by 5% compared to the value on the data plate.
3. Carry out the Auto tuning process to allow the inverter to learn the electrical information of the load connected to it (motor, cable and filter - if any). The calibration process can take up to 1 minute.
4. Wait for the calibration process to be completed successfully.

NOTE
The calibration process can take up to 1 minute. Wait until it is completed.

NOTE
The calibration process must be performed in the final electrical configuration of the system, that is after the motor, the cable and any filter have been fitted.

If a change is made to the motor, cable or filter once they have been fitted, the calibration process must be repeated.

CAUTION
Incorrect setting of motor voltage, frequency and rated current leads to incorrect results in the calibration process and consequently to motor malfunction.

WARNING
Setting the rated current of the motor too high compared to the value on the data plate can seriously damage both the motor and the inverter. Setting the rated current of the motor too high compared to the value on the data plate can seriously damage both the motor and the inverter.

WARNING
During calibration the motor coils are heated by the test current. If the motor is self-ventilated, the absence of motor rotation does not allow the heat to be dispersed by force. The motor should therefore be allowed to cool between one calibration and the next.

DANGER
During the calibration process, the motor remains stationary but is powered for the entire calibration period. Disconnect the device from the power supply before any intervention on the equipment and on the loads connected to it.

If the calibration process is not successful, check that:

- The connections between the inverter and the load (including any interposed motor filters).
- The set rated voltage, frequency and current values.

NOTE
The motor cannot be started until the calibration process has been completed.

NOTE
If the calibration process cannot be completed, it is possible to manually enter the parameters or stator resistance (Rs) and stator inductance (Ls) in the motor parameters menu (default password 002). These data can be provided by the motor manufacturer or obtained through measurements. If you do not have these data and the self-calibration process is not successful, contact the technical support service.

9.4.3. Adjusting the FOC control

The FOC control algorithm checks current (torque) and speed with defined response dynamics.

The FOC dynamics is set by default to a value sufficient to guarantee accurate and oscillation-free control in most applications.

In some cases, however, it may be necessary to increase (in case of frequency oscillations) or to lower (in case of overcurrent or igbt trip alarms) the "FOC dynamic" setting in the motor parameters menu (default password 002) according to the following table:

Configuration	FOC dynamics
Motor cables shorter than 100 m and no filter between inverter and motor.	200
Motor cables shorter than 100 m and a dV/dt filter between the inverter and the motor.	150
Motor cables longer than 100 m and a dV/dt filter between the inverter and the motor.	100
Presence of a sine filter between the inverter and the motor.	50 or 40 or less

WARNING
The incorrect configuration of the FOC dynamics may cause:

- Speed oscillations if the FOC dynamics is too slow.
- Overcurrent or igbt trip alarms if the FOC dynamics is too fast.

Intervene promptly by appropriately adjusting the "FOC Dynamics" parameter if the conditions listed above are present. Failure to act may lead to damages to the inverter, the motor and the system.

9.5. Initial display

When the device is switched on, the control firmware version (LCD = X.XX) and the power firmware version (INV = X.XX) are communicated to the user.

Subsequently, or as soon as the first initial set-up has been completed, the initial view opens.

The first line in the display shows the status of the device:

- **Inv: ON XX.X Hz** if the device is enabled for the control and the motor is running at the indicated frequency.
- **Inv: ON Mot: OFF** if the device is enabled for motor control and the motor is not running (ex: the pump has been stopped because it has reached its minimum stop frequency under constant pressure operation).
- **Inv: OFF Mot: OFF** if the device is not enabled for motor control, which is therefore stopped.

When the COMBO function is activated, the address of the corresponding device appears next to the item **Inv**.

9.5.1. Operating parameters

Parameter	Description
p =XX.X [bar]	p is the measured pressure value. By pressing the ENTER key, the set pressure value appears<XXX.X>.
f = XXX.X [Hz]	Parameter f represents the frequency (Hz) with which the inverter is powering the motor. If the control mode is set on "fixed frequency", it is possible to make a real-time variation of the working frequency by means of the ENTER key while the symbol *set* appears on the display. Press the ENTER key again to exit this mode, as evidenced by the disappearance of the symbol *set*; this also saves the new working frequency.
V_in=XXX [V] / I=XX.X [A]	Parameter V represents the power supply voltage. This appears only while the motor is in the OFF state. In the ON state, parameter I is displayed instead of the supply voltage, which represents the intensity of current (A) absorbed by the motor.

Parameter	Description
cosphi = X.XX	The cosphi parameter represents the cosine of the phi phase displacement angle between voltage and current. It is also called power factor.
P = XXXXX [W]	Provides an estimate of the active electrical power absorbed by the motor.
STATUS: NORMAL	In the absence of alarms, the STATUS is NORMAL. Otherwise, the alarm message flashes and an intermittent acoustic signal is emitted which can be silenced by pressing the STOP key. Press th ENTER key to access the Diagnostics menu. To return to the initial display, simply press the ENTER key.
MENU' ENT to access	Press the ENTER key to access the menu display.

9.5.2. Diagnostics

Parameter	Description
Inverter life XXXXX h : XX m	Inverter life
Motor life XXXXX h : XX m	Motor life
%f 25 50 75 100 %h XX XX XX XX	Operation statistics based on frequency and hours.
ALL. XXXXXXXXXXXXX XXXXXXX h : XX m	Alarm log (up to 8) in relation to the life of the inverter

9.6. Menu

To access the Menu section, press the ENTER key on the MENU' / ENT to access screen.

To exit the Menu section, press the STOP key several times until you go back to the Initial View.

NOTE
Stop the motor before entering the Menu section.

Access to the menus is password-protected at two levels:

- **Installer level**: Allows editing the parameters related to pump operation in the hydraulic system on which it is installed. **Password 1, default 001.**
- **Advanced level**: Allows editing the parameters that so critical that they may compromise the life of the device, the pump, and the system if they are set incorrectly. **Password 2, default 002**.

Within each menu, it is possible to change the relative access password.

NOTE
When an incorrect password is entered to access both the installer and advanced level, the parameters can only be displayed but not edited.

In case of loss of the password, contact the technical support service to obtain the universal password.

Menu	Description	Level	Default password
Control. param.	Menu of parameters for controlling the pump in the hydraulic system in which it is installed.	Installer	001
Motor parameters	Menu of parameters for motor control	Advanced	002
IN/OUT paramet.	Menu of parameters for analog and digital inputs and outputs	Installer	001
Connect. param.	Menu of parameters for connectivity and external communication.	Installer	001
Change init.set	Initial configuration menu.	Advanced	002

CAUTION

Access to this menu Change init.set is recommended only if you intend to completely reprogram the device starting from the factory settings.

The changes to the parameters made from this menu become effective only once the initial configuration has been completed, i.e. when Change init.set / COMPLETEDappears.

All other device parameters will be reset to factory settings.

9.7. Control parameters

Parameter	Default	Description	1	2	3	4	5
Control mode 1. Constant value 2. Fix speed 3. Const.value 2set 4. Fix speed 2 val. 5. External speed	Constant value	The following control modes can be selected: 1. Constant value: the device varies the speed of the pump in such a way as to keep the set value constant regardless of water consumption. 2. Fix speed: the device powers the pump at the set frequency. 3. Const.value 2set: two desired values can be selected by opening or closing digital input 2. 4. Fix speed 2 val.: two desired frequency values can be selected by opening or closing digital input 2. 5. External speed: it is possible to control the motor frequency through an analog signal connected to analog input 4.	x	x	x	x	x
AUX control mode XXXXXXXX	Constant value	Operate on digital input 4 to switch from the main control mode to the auxiliary control mode and vice versa.	x	x	x	x	x
Max alarm value p = XX.X [bar]	10	Value that can be reached in the system beyond which, even in constant frequency operating mode, the pump is stopped and an alarm signal is emitted. The pump is restarted only after the measured value has dropped below the maximum alarm value for more than 5 seconds.	x	x	x	x	x
Min alarm value p = XX.X [bar]	0	Minimum value that can be reached in the system below which, even in constant frequency operating mode, the pump is stopped and an alarm signal is emitted. The pump is restarted only after the measured value has risen above the minimum alarm value for more than 5 seconds.	x	x	x	x	x
Pipe Fill Ramp XXX [s]	= Ramp up time	Ramp time to follow after a start if the measured value is lower than the minimum alarm value. The piping filling ramp expires after the set time or if the measured value reaches the set value. In COMBO mode, only one unit is enabled to operate as long as the filling ramp is active.	x		x		
Ext.set enabling ON/OFF	OFF	Enabling the setting of the set value via analog input 3.	x		x		
Set value p = XXX.X [bar]	3	Value that you want to keep constant.	x				
Compensation p = XXX.X [bar]	0	Compensation at the maximum frequency. The sign can be reversed via the green key. 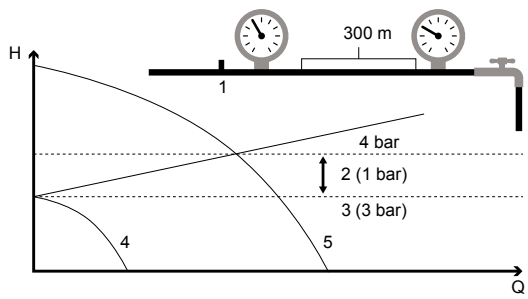 1: sensor; 2: Compensation ; 3: Set value ; 4: Min motor freq.; 5: Max motor freq. In the case of a group of pumps in COMBO mode, the compensation must be referred to each pump.	x				

Parameter	Default	Description	1	2	3	4	5
Set value 2 p = XXX.X [bar]	3	Value that you want to keep constant.			x		
Compensat. set 2 p = XX.X [bar]	0	Compensation at the maximum frequency. The sign can be reversed via the green key.			x		
Value set update t = XX [s]	5	Time interval for updating the set value according to the compensation.	x		x		
Operating freq. f = XXX [Hz]	= Max motor freq.	Frequency used by the device to power the motor.		x		x	
Operating freq.2 f = XXX [Hz]	= Max motor freq.	Frequency used by the device to power the motor.				x	
Freq.min.control fmin = XXX [Hz]	50	Minimum frequency below which the pump must try to stop following the control ramp (Control ramp).	x		x		
Stop delay t = XX [s]	5	Delay during which an attempt is made to stop the pump below the minimum control frequency (Freq.min.control).	x		x		
Control ramp t = XX [s]	40	Time in which the device decreases the motor power frequency from the minimum control frequency (Freq.min.control) to the minimum motor frequency (Min motor freq.). If during this time the measured value falls below Set value - Delta control, the device restarts the motor. If not, the device will stop the motor completely following the control ramp (Control ramp).	x		x		
Delta start p = XXX.X [bar]	0.5	This parameter communicates by how much the measured value must fall from the set value for the previously stopped pump to be restarted.	x		x		
Delta control p = XXX.X [bar]	0.1	This parameter communicates by how much the measured value must fall in relation to the set value so that the pump, during shutdown in control ramp, is restarted. 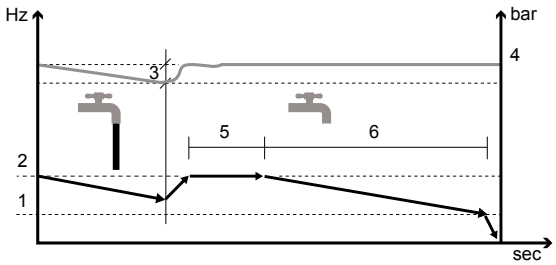 1: Min motor freq.; 2: Freq.min.control ; 3: Delta control; 4: Set value ; 5: Stop delay; 6: Control ramp	x		x		
Delta stop p = XX.X [bar]	0.5	This parameter represents the increment of the measured value with respect to the set value that must be exceeded so that a forced shutdown of the pump according to the stop ramp can occur.	x		x		
Ki XXX		Integral coefficient used in constant value adjustment.	x		x		
Kp XXX		Proportional coefficient used in constant value adjustment.	x		x		
Pump DOL 1 ON/OFF	OFF	Enabling or disabling auxiliary pump 1 at fixed speed (D.O.L.)	x		x		
Pump DOL 2 ON/OFF	OFF	Enabling or disabling auxiliary pump 2 at fixed speed (D.O.L.)	x		x		
COMBO ON/OFF	OFF	Enable the function COMBO for the combined operation of several pumps in parallel. Read the dedicated chapter.	x		x		
Address XX	01	Device address when in COMBO mode: • 0: master • 01 to 07: slave	x		x		

Parameter	Default	Description	1	2	3	4	5
Alternance ON/OFF	ON	Enabling the alternation between units in COMBO and D.O.L. The order of priority of operation is alternated based on the previous start-up of each pump in order to obtain an almost uniform wear of the pumps.	x		x		
Altern. period t = XX [h]	0	Maximum difference in operating hours between multiple devices in the unit. 0 means 5 minutes.	x		x		
COMBO synchrony ON/OFF	OFF	Through this parameter it is possible to activate the synchronous operation of the pumps in COMBO. Read the dedicated chapter. However, it is necessary to lower parameter Freq.min.control accordingly.	x		x		
Start delay AUX t = XX [s]	00	Time delay with which the pumps in a group start up after the variable speed pump has reached the maximum motor frequency and the measured value has fallen below the difference Set value - Delta control.	x		x		
PI control Direct/Reverse	Direct	PI control mode: • Direct: as the pump speed increases, the measured value increases. • Reverse: as the pump speed increases, the measured value decreases.	x		x		
Periodic autorun t = XX [h]	00	Periodic pump start-up after X hours of inactivity. The value 0 disables the function.	x	x	x	x	x
Dry run cosphi cosphi = X.XX		Cosphi value that is measured when the pump is running dry. Below this value the device stops the pump and generates a water shortage alarm. If the motor is of the synchronous type with permanent magnets, this parameter represents the percentage with respect to the rated current set below which the device stops the motor and generates the no-water alarm.	x	x	x	x	x
Restarts delay t = XX [min]	10	Time base that establishes the delay of attempts to restart the pump following a no-water alarm. With each attempt, the delay time is doubled. The maximum number of attempts is 5.	x	x	x	x	x
Change PASSWORD1 Press ENT		By pressing the ENT key it is possible to change the installer level password (level 1) (default 001).	x	x	x	x	x

9.8. Motor parameters

Parameter	Default	Description
Motor type XXXXXXXX	Threep-hase asyn.	Type of motor connected and control used: • Singlephase PSC: control for single-phase 2-wire PSC motors. • Threephase asyn.: control for three-phase asynchronous motors. • Synchronous PM: control for permanent magnet synchronous motors. • Scalar: V / f scalar control.
Rated motor Volt V = XXX [V]		Rated voltage of the motor according to its data plate. The average voltage drop across the inverter is 20 to 30V RMS depending on the load conditions.
Voltage boost V = XX.X [%]		Motor starting voltage increase to favor the starting torque. Contact the motor manufacturer for more information.
Rated motor Amp. I = XX.X [A]		Motor rated current according to its data plate increased by 5%. The voltage drop across the inverter may result in a current absorption greater than the motor rated current indicated on the data plate. It is necessary to check with the motor manufacturer that this overcurrent can be tolerated.
Rated motor freq f = XXX [Hz]	50	Rated frequency of the motor according to its data plate.
Max motor freq. f = XXX [Hz]	50	Maximum frequency intended to power the motor. Reducing the maximum motor frequency reduces the maximum current consumption.
Min motor freq. f = XXX [Hz]	30	Minimum motor frequency. When using submersible pumps with Kingsbury type thrust system, it is recommended not to go below 1750 rpm so as not to compromise the thrust system.

Parameter	Default	Description
Ramp up time t = XX [sec]		Motor start ramp from minimum frequency (Min motor freq.) to maximum frequency (Max motor freq.). Slower ramps cause less strain on the motor and pump and therefore promote longer life. On the other hand, response times are longer. Excessively fast start-up ramps may lead to an overload in the inverter.
Ramp down time t = XX [sec]		Motor stop ramp from maximum frequency (Max motor freq.) to minimum frequency (Min motor freq.). Slower ramps cause less strain on the motor and pump and therefore promote longer life. On the other hand, response times are longer. Excessively fast stop ramps may lead to an overvoltage in the inverter due to the regenerative effect.
Ramp f min mot. t = XX [sec]		Time in which the motor reaches the minimum frequency from standstill (Min motor freq.) and vice versa. 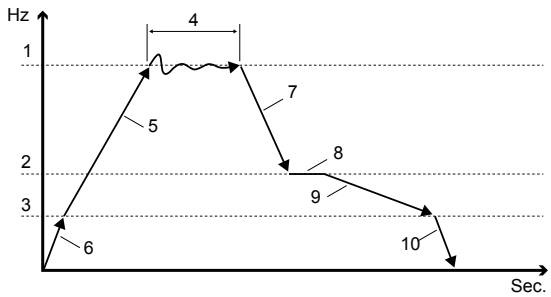 1: Max motor freq.; 2: Freq.min.control ; 3: Min motor freq.; 4: PI control; 5: Ramp up time; 6: Ramp f min mot. ; 7: Ramp down time; 8: Stop delay; 9: Control ramp; 10: Ramp f min mot.
PWM f = XX [kHz]		Inverter modulation frequency. It is possible to choose between 2.5, 4, 6, 8, 10 kHz depending on the inverter model. Higher values correspond to a more faithful reconstruction of the sine wave. When using very long motor cables (>20 m), the appropriate output filters, available upon request, should be interposes between the inverter and the motor and the correct value of the PWM parameter according to the type of filter and the length of the cable should be set. This reduces the probability of voltage peaks at the motor input while safeguarding the winding insulation. Lower values reduce the heating of the inverter.
V/f lin.-> quad. XXX %	80%	This parameter allows changing the V/f characteristic with which the device supplies the motor. The linear characteristic corresponds to a constant torque characteristic with varying revolutions. The quadratic characteristic corresponds to a variable torque characteristic and is generally suitable for use with centrifugal pumps. The torque characteristic must be chosen ensuring smooth operation, reduced energy consumption and lower heating and motor noise. With single-phase motors, we recommend setting linear V/f (0%).
Rotation sense ---> / <---	--->	Running direction of the motor. Should the motor run in the wrong direction, it is possible to reverse the running direction without having to change the phase sequence in the connection. **CAUTION** If there is more than one pump in a COMBO unit, it is best to use the same phase sequence when connecting the motors and to set the same running direction.
Motor tuning ENT to access		If the device is "FOC-ready", motor calibration must be carried out before commissioning. **WARNING** Carefully read the chapter dedicated to the FOC motor control.
Motor resistance Rs=XXX.XX [Ohm]		Manual setting of the stator resistance.
Motor inductance Ls=XXX.XX [mH]		Manual setting of the stator inductance.
FOC dynamics XXX	200	Setting of the control dynamic of the FOC algorithm.
FOC speed XXX	5	Setting of the control speed of the FOC algorithm.

Parameter	Default	Description
Autorestart ON/OFF	OFF	By selecting ON, when the mains power is restored after a power failure, the device will return to the same state it was in before the power failure: this means that if the pump was working, it will start working again
Change PASSWORD2 Press ENT		By pressing the ENT key it is possible to change the advanced level password (level 2) (default 002).

9.9. IN / OUT parameters

Parameter	Default	Description
Unit XXXXX	bar	Units of measurement [bar,%, ft, in, cm, m, K, F, C, gpm, l / min, m3 / h, atm, psi].
F.scale sensor p = XXX.X [bar]	16	Full scale of the sensor.
Min.value sensor p = XXX.X [bar]	0	Minimum sensor value.
Offset input1 XX.X [%]	20%	Zero correction for analog input 1 (4-20 mA). (20 mA x 20% = 4 mA).
Offset input2 XX.X [%]	20%	Zero correction for analog input 2 (4-20 mA). (20 mA x 20% = 4 mA).
Offset input3 XX.X [%]	20%	Zero correction for analog input 3. 4-20 mA : 20 mA x 20% = 4 mA 0-10 V : 10V x 0% = 0 V
Offset input4 XX.X [%]	0%	Zero correction for analog input 4. 4-20 mA: 20 mA x 20% = 4 mA 0-10 V : 10V x 0% = 0 V
AN1 AN2 function XXXXXXXX	Inde-pendent	Operating logic of analog inputs AN1, AN2: • Independent. The active sensor is relative to analog input 1, while the sensor connected to analog input 2 serves as an auxiliary in case of failure of the sensor or of analog input 1. • Selectable. The active sensor may be selected via digital input 3. • Difference 1-2. The digital difference in absolute value is performed between the measurements of analog input 1 and analog input 2. • Higher value. The maximum value between the measurements of the two sensors is considered. • Lower value. The minimum value between the measurements of the two sensors is considered.
Digital input1 N.O./N.C.	N.O.	If N.O.(Normally Open) is selected, the device will continue to operate the motor if digital input 1 is open. Conversely, it will stop the motor if digital input 1 is closed. If N.C. (Normally Closed) is selected, the device will continue to operate the motor if digital input 1 is closed. Conversely, it will stop the motor if digital input 1 is open.
Digital input2 N.O./N.C.	N.O.	If N.O.(Normally Open) is selected, the device will continue to operate the motor if digital input 2 is open. Conversely, it will stop the motor if digital input 2 is closed. If N.C. (Normally Closed) is selected, the device will continue to operate the motor if digital input 2 is closed. Conversely, it will stop the motor if digital input 2 is open. Digital input 2 is also used to select set value 1 or set value 2 in the control mode Const.value 2set or to select working frequency 1 or 2 in the control mode Fix speed 2 val..
Digital input3 N.O./N.C.	N.O.	If N.O.(Normally Open) is selected, the device will continue to operate the motor if digital input 3 is open. Conversely, it will stop the motor if digital input 3 is closed. If N.C. (Normally Closed) is selected, the device will continue to operate the motor if digital input 3 is closed. Conversely, it will stop the motor if digital input 3 is open. Digital input 3 is also used to select sensor 1 or sensor 2 when the parameter AN1 AN2 function is set to Selectable.
Digital input4 N.O./N.C.	N.O.	If N.O.(Normally Open) is selected, the device will continue to operate the motor if digital input 4 is open. Conversely, it will stop the motor if digital input 4 is closed. If N.C.(Normally Closed) is selected, the device will continue to operate the motor if digital input 4 is closed. Conversely, it will stop the motor if digital input 4 is open. Digital input 4 is also used to select the main or auxiliary control mode in case they are different. Digital input 4 also serves as alarm reset.

Parameter	Default	Description
Dig.In.2/3 delay t = XX [s]	1	Delay of digital inputs 2 and 3. Digital inputs 1 and 4 have a fixed delay of 1 second.
Change PASSWORD1 Press ENT		By pressing the ENT key it is possible to change the installer level password (level 1) (default 001).

9.10. Connectivity parameters

Parameter	Default	Description
Language XXXXXXX	English	Language of communication with the user
BTLE connection ON / OFF	ON	Enable BTLE communication
MODBUS address XXX	1	MODBUS address from 1 to 247
MODBUS baudrate XXXXX	9600	MODBUS baudrate from 1200 bps to 57600 bps
MB data format XXXXX	RTU N81	MODBUS data format: RTU N81, RTU N82, RTU E81, RTU O81
EEPROM writing ON/OFF	OFF	Setting the writing mode of the parameters transmitted via MODBUS: ON: the datum is saved in EEPROM OFF: the datum is not saved in EEPROM
Change PASSWORD1 Press ENT		By pressing the ENT key it is possible to change the installer level password (level 1) (default 001).

10. Constant pressure operation

10.1. Introduction

TheVASCO - VAriable Speed COntroller can manage the running speed of the pump in such a way as to keep the pressure constant as the water demand changes. A pressure sensor placed as close as possible to the pump is used for this purpose.

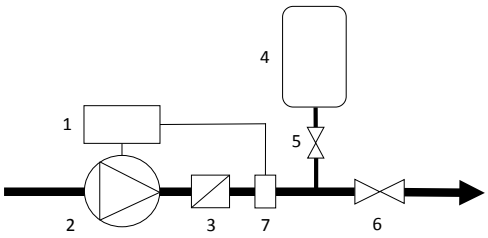

1: Inverter; 2: Pump; 3: Check valve; 4: Pressure vessel; 5: Gate valve; 6: Gate valve; 7: Pressure sensor

10.2. The pressure vessel

In water systems equipped with inverters, the function of the pressure vessel is to compensate for losses (or minimum water consumption) and maintain pressure when the pump is stopped, thus avoiding excessively frequent start/stop cycles. It is of fundamental importance to correctly choose the volume and the pre-charge pressure of the pressure vessel. Too small volumes do not allow effectively compensating the minimum water consumption or the losses when the pump is stopped, while too high volumes make it difficult for the inverter to control the pressure.

It is generally sufficient to place a pressure vessel with a volume of about 10% of the maximum flow rate required, considered in liters/minute.

Example

If the maximum flow rate required is 60 l/min, it is sufficient to use a 6 liter pressure vessel.

The pre-charge pressure of the pressure vessel must be approx. 80% of the operating pressure.

Example

If the set pressure in the inverter is 4 bar, the pre-charge pressure of the pressure vessel should be approx. 3.2 bar.

NOTE
The pre-charge pressure must be adjusted with the system completely unloaded.

10.3. Electrical connections

The device may be connected to linear pressure sensors with 4 - 20 mA output. The supply voltage range of the sensor must be such as to include the 15 V DC voltage with which the device feeds the analog inputs.

The pressure sensor is connected via the terminals of the analogue input 1, i.e:

- AN1: 4-20 mA signal (-)
- +15V: 15 VDC power supply (+)

The device supports the installation of a second pressure sensor for:

- Operating at constant differential pressure (read the dedicated chapter).
- Automatic replacement of the main pressure sensor in case of failure.
- Exchange of active pressure sensor via digital input.

The secondary pressure sensor is connected via the terminals of the analogue input 2, i.e:

- AN2: 4-20 mA signal (-)
- +15V: 15 VDC power supply (+)

11. Splitting the pumping system

11.1. Introduction.

When the variation in water demand is considerable, it is a good idea to split the pumping unit into several units to ensure greater efficiency and reliability.

A splitting method (called COMBO mode) consists in using several pumps in parallel (up to 8) each controlled by an inverter.

In this case, the efficiency and reliability of the pumping unit is maximized, ensuring soft starts and stops and complete protection of the pumps. The alternation of operation also allows to even out the wear of the pumps and, in case of failure of a pump or an inverter, the remaining units of the group can continue their operation.

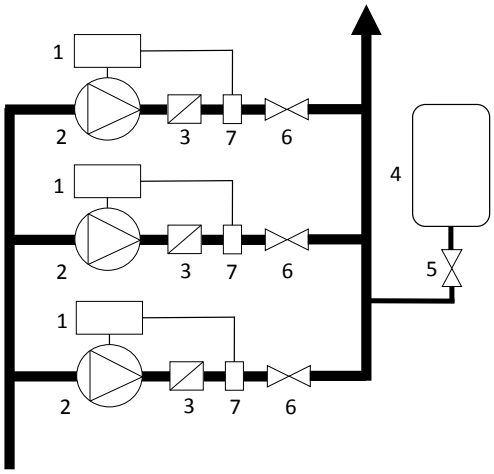

1: Inverter; 2: Pump; 3: Check valve; 4: Pressure vessel; 5: Gate valve; 6: Gate valve; 7: Pressure sensor

A second splitting method requires installing in parallel a single pump regulated in frequency by the inverter and one or two other D.O.L. pumps. (Direct On Line) that are switched on or off by the inverter itself through contactors.

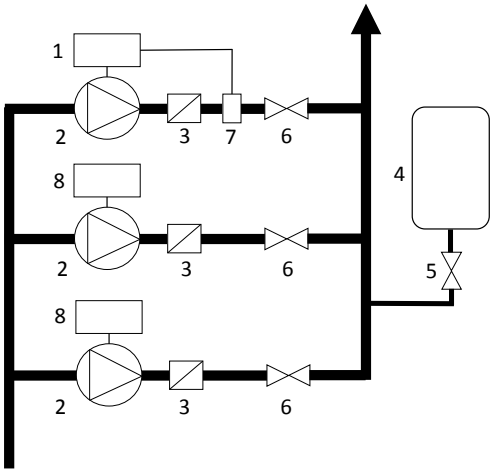

1: Inverter; 2: Pump; 3: Check valve; 4: Pressure vessel; 5: Gate valve; 6: Gate valve; 7: Pressure sensor; 8: D.O.L. pump control device.

WARNING
The D.O.L. pumps should be controlled by special devices that, besides managing the start and stop, also ensure the main protections (overload, dry running).
Nastec offers the PILOT device for this purpose.

Finally, it is possible to equip the system with more pumps in COMBO mode, and one or two more D.O.L. pumps that intervene when more water is required.

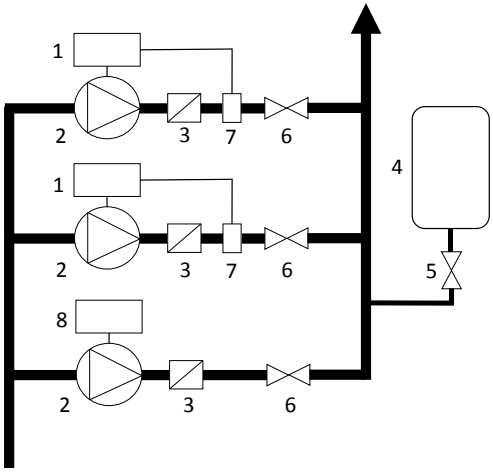

1: Inverter; 2: Pump; 3: Check valve; 4: Pressure vessel; 5: Gate valve; 6: Gate valve; 7: Pressure sensor; 8: D.O.L. pump control device.

11.2. Variable speed pumping unit with one or two D.O.L. pumps.

11.2.1. Operating principle.

The unit consists of a pump controlled by an inverter, equipped with a pressure sensor, and one or two D.O.L. pumps that are switched on or off by the inverter itself through contactors.

When there is a water demand, the pump controlled by the inverter (primary pump) is always the first to start up in the unit. Its speed varies according to demand.

As the demand increases and the maximum frequency is reached, the signal to start the first D.O.L. pump is given. (D.O.L. pump 1) and at the same time the variable speed pump reduces its frequency.

A further water demand causes an increase in the frequency of the primary pump until, once its maximum frequency is reached, the signal to start the second D.O.L. pump is given (D.O.L. pump 2).

The primary pump continues its operation at variable speed according to the instantaneous water demand.

In case of reduced demand, the primary pump decreases its frequency and the inverter progressively switches off the D.O.L pump 2 and the D.O.L pump 1.

If parameter Alternance is set to ON, the D.O.L. pumps are started with alternating priority.

11.2.2. Electrical connections.

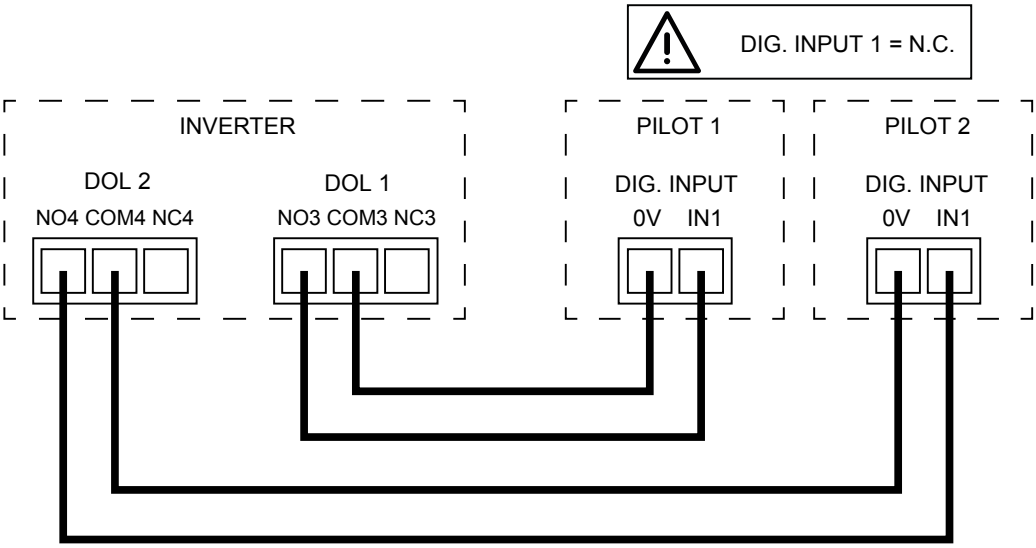

11.2.3. Programming.

Menu	Parameter	Value
Control. param.	Pump DOL 1	ON to activate / OFF to deactivate
Control. param.	Pump DOL 2	ON to activate / OFF to deactivate
Control. param.	Alternance	ON to activate / OFF to deactivate
Control. param.	Start delay AUX	In order to avoid cyclic switching on and off of the D.O.L. pumps, it is advisable to set it to at least 1 s.
Control. param.	Delta control	In order to avoid cyclic switching on and off of the D.O.L. pumps, it is advisable to set a sufficiently high value so that, when the D.O.L. pump switches on, the variable speed pump will run at a higher frequency than its minimum frequency at zero flow.
Control. param.	Delta stop	In order to avoid cyclic switching on and off of the D.O.L. pumps, it is advisable to set a sufficiently high value so that, when the D.O.L. pump switches on, the pressure does not rise above such value.

11.3. Variable speed pumping unit with two or more pumps in COMBO mode.

The unit consists of two or more pumps (up to 8) each controlled by an inverter, and each equipped with its own pressure sensor. The inverters are connected to each other via RS485 serial port.

One inverter is configured as master (address 00) whereas the others are configured as slaves (addresses 01 to 07).

NOTE
Each inverter must be equipped with its own pressure sensor.

11.3.1. Cascade operating principle.

Cascade operation is the default operation in COMBO mode.

When water is required, a pump is started at variable speed according to the demand.

As the demand increases and the maximum frequency is reached, a second pump is started.

An additional water demand, leads to an increase in the pump frequency until, having reached its maximum frequency, a third pump is started and so on.

In case of reduced demand, the last pump started decreases its frequency until it switches off.

11.3.2. Synchronous operating principle.

If parameter COMBO synchrony is set to ON, synchronous operation is achieved. This operating mode provides additional energy savings over cascade operation.

When water is required, a pump is started at variable speed according to the demand.

When the demand increases and the maximum frequency is reached, a second pump is started and the two pumps run at the same speed to satisfy the water demand.

A further request leads to an increase in the frequency of the two pumps until, having reached their maximum frequency, a third pump is started and so on.

In case of reduced demand, all the pumps of the unit reduce their frequency and, once reached the minimum frequency, the pump that was started last switches off.

NOTE
To ensure correct synchronous operation, parameter Freq.min.control must be set appropriately, i.e. two or three Hz above the working frequency at zero flow.

NOTE
If parameter Alternance is set to ON , the start priority of the pumps in COMBO mode is established according to the operating hours, and parameter Altern. period establishes the number of hours of continuous operation after which the pumps in the unit are forced to alternate.

11.3.3. Electrical connections.

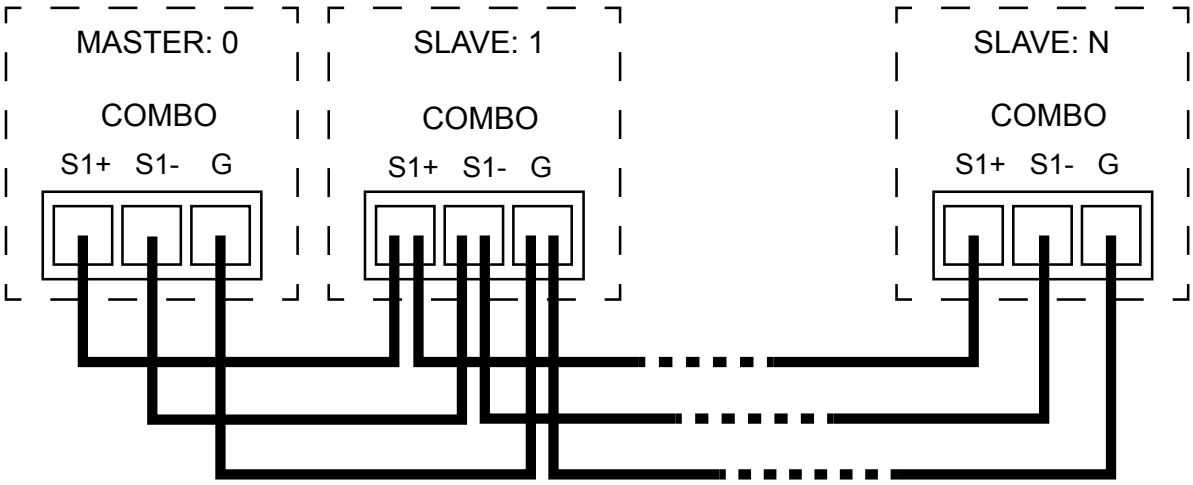

WARNING
Respect the polarity of the connections.

11.3.4. Programming the master unit.

Menu	Parameter	Value
Control. param.	COMBO	ON to activate.
Control. param.	Address	00
Control. param.	Alternance	ON to activate / OFF to deactivate.
Control. param.	Altern. period	Establishes the number of hours of continuous operation after which the pumps in the unit are forced to alternate. The value 0 means 5 minutes.
Control. param.	COMBO synchrony	ON to activate / OFF to deactivate.
Control. param.	Start delay AUX	We recommend setting 0 s.

11.3.5. Programming of slave units.

Menu	Parameter	Value
Control. param.	COMBO	ON to activate.
Control. param.	Address	from 01 to 07.
Control. param.	Alternance	ON to activate / OFF to deactivate. It is possible to determine which devices are included in the alternation and which are not. Devices excluded from the alternation will receive a starting priority based on their address.

NOTE
To start or stop a unit in COMBO mode, simply press the START or STOP button on the master unit only.

NOTE
To change the operating parameters of a COMBO unit, operate on the unit's master.

When the Master Menu is exited, the remote programming of the connected slave units is required. In this manner, all parameters set in the master are also copied to the slaves with the exception of parameter Address.

CAUTION
When the master menu is accessed, the communication with the slave units is interrupted and the A13 NO COMMUNICATION alarm is produced. Communication is automatically re-established by exiting the Master Menu.

WARNING
In case of pumps in COMBO mode, it is recommended to make the connections to the motor respecting the same phase sequence. In this manner, it will be ensured that by copying parameter Rotation sense from the master unit to the slave units, all the pumps in the unit will maintain the correct running direction.

11.3.6. Automatic master replacement

In COMBO mode, if a slave or the pump connected to it should fail or enter an alarm state, the unit will continue to operate with the remaining units.

In case the master or the pump connected to it should break down or enter an alarm state, the unit will stop for about 30 seconds generating the A13 NO COMMUNICATION alarm in the slaves. After the waiting time has elapsed, the slave with address 1 will become the master, thus allowing the unit to resume operation.

If the master reappears in the unit, the latter will stop again for about 30 seconds, generating the A12 ADDRESS ERROR alarm in the master and in the slave 1.

After the waiting time has elapsed, the master will assume address 0 and the slave address 1, thus allowing the unit to resume operation.

CAUTION
In order to enable automatic master changeover, parameter Autorestart must be set to ON.

Do not touch the keypad of the devices during the master replacement process, otherwise the master change process will be interrupted.

12. Operation at constant differential pressure

12.1. Introduction

The inverter may manage the running speed of the pump in such a way as to maintain a constant differential pressure between the delivery and the suction of the pump in circulation systems. For this purpose, a differential pressure sensor is used or, alternatively, it is possible to use two identical pressure sensors placed one in the suction and the other in the delivery section of the pump. The absolute difference of the read values is performed by the device itself.

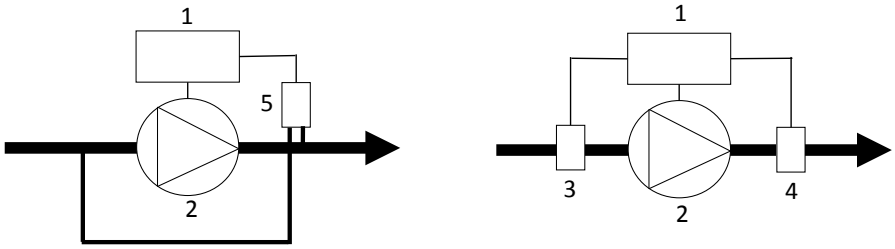

1: Inverter; 2: Pump; 3: Pressure sensor; 4: Pressure sensor; 5: Differential pressure sensor

NOTE
If the suction pressure is expected to drop below atmospheric pressure during operation, absolute rather than relative pressure sensors must be used.

12.2. Electrical connections

The device may be connected to linear pressure sensors with 4 - 20 mA output. The supply voltage range of the sensor must be such as to include the 15 V DC voltage with which the device feeds the analog inputs.

If a differential pressure sensor is used, it is necessary to connect the sensor to the analog input 1, i.e:

- AN1: 4-20 mA signal (-)
- +15V: 15 VDC power supply (+)

If two pressure sensors are used, one sensor must be connected to analog input 1 while the other sensor must be connected to analog input 2, i.e.:

- Sensor 1:
  - AN1: 4-20 mA signal (-)
  - +15V: 15 VDC power supply (+)
- Sensor 2:
  - AN2 4-20 mA signal (-)
  - +15V: 15 VDC power supply (+)

In circulation systems, the start and stop of the pump is generally controlled by an external contact which can therefore be connected to digital input 1 (IN1, 0V) and configured accordingly.

12.3. Programming

Menu	Parameter	Value
IN/OUT paramet.	F.scale sensor	Sensor full scale value range.
IN/OUT paramet.	Min.value sensor	Minimum sensor value.
IN/OUT paramet.	AN1 AN2 function	Independent when a differential pressure sensor is used. Difference 1-2 when two pressure sensors are used.
IN/OUT paramet.	Digital input 1	N.O. when the pump is stopped by closing the contact of digital input 1 N.C. when the pump is stopped by opening the contact of digital input 1
Control. param.	Control mode	Constant value
Control. param.	Set value	Differential pressure value that you may want to keep constant.

Menu	Parameter	Value
Control. param.	Compensation	This parameter is set other than 0 if you intend to operate a proportional differential pressure control. Additional energy savings may be achieved through this type of control. The pressure difference that you want to keep constant at Max motor freq. is given by the sum of parameters Set value + Compensation. The pressure difference that you want to keep constant at Min motor freq. corresponds to Set value . The pressure set then varies proportionally between Min motor freq. and Max motor freq.. 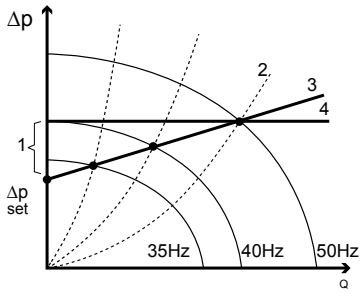 1: Compensation; 2: System curve; 3: Proportional differential pressure; 4: Constant differential pressure
Control. param.	Freq.min.control	Same as Min motor freq.
Control. param.	Stop delay	99 s
Control. param.	Start delay AUX	In twin circulation systems (two pumps), each controlled by an inverter in COMBO mode, this parameter should be set to 99 s in order to activate only one pump at a time while ensuring the alternation of the same.

13. Alarms

When an alarm occurs, the device starts emitting an acoustic signal (if available) and an intermittent warning appears on the STATUS screen indicating the corresponding alarm. By pressing the STOP key (only and exclusively in correspondence with the STATUS screen) it is possible to attempt to reset the machine. If the cause of the alarm has not been resolved, the device displays the alarm again and emits an acoustic signal.

WARNING
Immediate remedies must be implemented in case of alarms to safeguard the integrity of the device itself and of the system in which it is installed.

Alarm	Description	Possible solutions
LINE<->MOT INV.	Reverse the connection of the power cable and motor cable.	• Correct the connection of the power and motor cables.

Alarm	Description	Possible solutions
A01 OVERCURRENT MOT.	The current absorbed by the motor exceeds the value set in the parameter Rated motor Amp.. Reset mode: • Automatic reset after 10 seconds for up to 7 attempts, after which you must wait for 60 minutes. • Disconnecting the power supply.	• Verify that the value set for the parameter Rated motor Amp. corresponds at least to the rated current of the motor according to its rating plate data. **NOTE** The voltage drop across the inverter (variable between 20 and 40 VAC) causes the motor to be powered at a slightly lower voltage than the one stated on the data plate. The current absorbed by the motor could therefore be slightly higher than the rated current indicated in data plate and, to obtain maximum performance, it is necessary to increase the parameter Rated motor Amp. between 5% and 10%. **WARNING** Check with the motor manufacturer the tolerability to withstand a current greater than its rated current. • Check that all the motor phases are correctly connected and that the connection is suitably configured in Star or Delta. • Check that motor parameters are correctly set. • In devices with FOC control, perform a new motor calibration. • In the presence of output filters (dV / dt or sinusoidal), check that they are correctly connected and, in devices with FOC control, check that you have correctly set the parameters PWM and FOC dynamics in relation to the length of the motor cable and the type of filter used. • Check that the pump is turning in the correct direction. • Make sure that the motor is free to rotate and check for any mechanical issues. • Adjust parameter Voltage boost
A02 SENSOR FAULT	The current value read by the analog input is less than 4 mA. Reset mode: • Alarm reset by STOP key. • Disconnecting the power supply	• Check that the connections on the device side and on the sensor side are correct. • Check that the sensor is fed the correct power. • Check that the sensor is working properly. • If only one sensor is connected to analog input 1, try to connect it to analog input 2.
A03 OVER TEMP. INV.	The temperature reached by the device is higher than the maximum allowed value. Reset mode: • Automatic reset	• Check that the ambient temperature is within the allowed limits. • Make sure the device is protected from direct exposure to sunlight or heat sources. • Check that both the external and internal cooling fans (if present) are working properly. • Check that the dissipation channels are clean. • Check that the device is cooled as indicated in the dedicated chapter. • Reduce parameter PWM as much as possible. **NOTE** To ensure uninterrupted operation, the inverter automatically reduces the maximum frequency (i.e. power) when the internal temperature reaches a certain threshold. If such frequency reduction is not sufficient to keep the temperature above the maximum permitted value, the inverter will stop the motor and trigger the alarm A03 OVER TEMP. INV..
A04 DRY RUN COSPHI	The warning W26 NO WATER appeared 5 consecutive times following the automatic reset attempts. Reset mode: • Alarm reset by STOP key. • Disconnecting the power supply	**WARNING** When the warning W26 NO WATER appears, the device will automatically restart the load after a time equal to the value set in the parameter Restarts delay multiplied by the number of attempts made. At the end of the fifth attempt, the device will definitively stop the load producing the alarm A04 DRY RUN COSPHI. The alarm must be reset manually.

Alarm	Description	Possible solutions
A05 UNDER VOLTAGE	• Supply voltage below the minimum allowed value. • Insufficient input power to power the device. Reset mode: • Automatic reset if parameter Autorestart = ON	• Check the value of the power supply voltage both under no load and load conditions. • Verify that the source has enough power to power the load.
A06 OVER VOLTAGE	The power supply voltage or the voltage inside the device exceeds the maximum allowed value. Reset mode: • Automatic reset if parameter Autorestart = ON	• Check the value of the power supply voltage both under no load and load conditions. • Check for regeneration from the load. • Increase parameter Ramp down time • Increase parameter Ramp f min mot. • In the case of a permanent magnet motor, check that the load is not subjected to passive movement.
A07 MAX. VALUE ALARM	The value read by the analog input is higher than the value set for the parameter Max alarm value. Reset mode: • Automatic reset	• Check the value set for the parameter. • Check the hydraulic causes that lead to the alarm condition. • Check that the sensor is working properly.
A08 LOCKED ROTOR	The automatic frequency limitation created by the inverter following an excessive absorption by the motor (beyond the value set in the parameter Rated motor Amp.) causes a reduction of the frequency below the average value between Min motor freq. and Max motor freq.. Reset mode: • Alarm reset by STOP key. • Disconnecting the power supply	• Check the possible solutions for the alarm A01 OVERCURRENT MOT.
A09 OVERLOAD INV.	The current absorbed by the load exceeds the rated current of the device. Reset mode: • Alarm reset by STOP key. • Disconnecting the power supply	• Check that the rated current of the motor is lower than the rated current of the device. • Make sure that the motor is free to rotate and check for any mechanical issues. • Increase the value of the parameter Ramp up time. • Increase the value of the parameter Ramp f min mot.. • Adjust parameter Voltage boost • Check the value of the power supply voltage both under no load and load conditions. **CAUTION** The device can supply power to the load for 10 minutes at a current consumption of 101 % of the rated current of the device, and for 1 minute at a current consumption of 110 % of the rated current of the device.
A10 IGBT TRIP ALARM	The current absorbed by the load instantaneously exceeds the maximum current protection of the device's power module. Reset mode: • Automatic reset after 10 seconds for up to 3 attempts, after which you must wait for 60 minutes. • Disconnecting the power supply	• Check the possible solutions for alarms A01 OVERCURRENT MOT. and A09 OVERLOAD INV.. • Check for short circuits between the output phases and the ground insulation. • Check that the system is properly grounded. • Check for electrical noise from other devices connected to the system.
A11 NO LOAD	The current absorbed by the load is too low in relation to the parameter Rated motor Amp.. Reset mode: • Alarm reset by STOP key. • Disconnecting the power supply	• Check the possible solutions for the alarm A01 OVERCURRENT MOT.

Alarm	Description	Possible solutions
A12 ADDRESS ERROR	In COMBO mode, multiple devices in the group have the same address. Reset mode: • Automatic reset	• Restore the correct value of parameter Address in all the devices in the group. • Verify which situation triggers the alarm. • If the alarm is triggered after a master replacement, check that the parameter Autorestart is activated. • Check the electrical connection between the slave unit and the master, and the presence of possible disturbances.
A13 NO COMMUNICATION	In COMBO mode, the communication between the slave unit and the master has been interrupted. Reset mode: • Automatic reset	• Check the electrical connection between the slave unit and the master, and the presence of possible disturbances. • Exit the master programming menu. • Attempt a manual reset of the alarm. **CAUTION** Keep signal cables separate and never parallel to power cables. If it is necessary to cross them, make sure that they cross perpendicularly.
A14 MIN. VALUE ALARM	The value read by the analog input is lower than the value set for the parameter Min alarm value. Reset mode: • Automatic reset	• Check the value set for the parameter. • Check the hydraulic causes that lead to the alarm condition. • Check that the sensor is working properly.
A15 KEYBOARD FAULT	One of the keys of the keyboard was held down for more than 30 seconds. Reset mode: • Alarm reset by STOP key. • Disconnecting the power supply	• Check that the keys are mechanically free.
A16 CPU ALARM	Communication error between the control part and the power part or error in the CPU. Reset mode: • Automatic reset	• Check the value of the power supply voltage both under no load and load conditions. • Check for electrical noise from other devices connected to the system. • Check the integrity of the communication cable between the control board and the power board.
A17 BRAKE ALARM	In devices equipped with brakes, it indicates the achievement of the maximum energy that the braking resistor can withstand. Reset mode: • Automatic reset if parameter Autorestart = ON	• Check the possible solutions for the alarm A06 OVER VOLTAGE .
A18 BRAKE OVERTEMP	In devices equipped with brakes, it indicates when the maximum temperature of the braking resistor has been reached. Reset mode: • Automatic reset if parameter Autorestart = ON	• Check the possible solutions for the alarm A06 OVER VOLTAGE . • Check that the braking resistor is working properly.
A19 OUT OF STEP	With parameter Motor type set to Synchronous PM, the loss of motor control occurs. Reset mode: • Automatic reset with a 3-minute delay.	• Check the possible solutions for the alarm A01 OVERCURRENT MOT.
A20 INPUT PHASE LOSS	Absence of a power supply phase. Reset mode: • Automatic reset if parameter Autorestart = ON	• Check that all three power phases are present. • Check the balance of the power supply phases.

14. Warnings

Warning	Description	Possible solutions
W01 ACTIVE DIG.IN. 1	Digital input 1 has been activated.	• Check the configuration and connections to digital input 1.
W02 ACTIVE DIG.IN. 2	Digital input 2 has been activated.	• Check the configuration and connections to digital input 2.
W03 ACTIVE DIG.IN. 3	Digital input 3 has been activated.	• Check the configuration and connections to digital input 3.
W04 ACTIVE DIG.IN. 4	Digital input 4 has been activated.	• Check the configuration and connections to digital input 4.
W20 TEMP. DERATE	The inverter is limiting the maximum motor frequency to keep the inverter temperature below the maximum limit.	• Check the possible solutions for the alarm A03 OVER TEMP. INV..
W21 OVERLOAD 15V	15V power supply overload.	• Check the absorption of the loads and any short circuits connected to the 15V power supply
W22 EEPROM COM.	No communication with EEPROM	• Contact the technical support service.
W23 EEPROM FAULT	Failure in EEPROM	• Contact the technical support service
W25 ALARM SLAVE X	In control mode COMBO, the master has detected an alarm in the X slave.	• Check the status of the XX slave unit indicated by the master.
W26 NO WATER	The power factor (cosphi) of the motor read by the device is permanently below the value set in the parameter Dry run cosphi.	• Check that the pump is properly primed. • Check that the pump is turning in the correct direction. • Check that the parameter Dry run cosphi is set correctly.
W27 BLOCK START/ STOP	The START/STOP buttons have been locked.	• Press the START or STOP button for at least 5 seconds to release the lock.

NOTE

With three-phase asynchronous motors, the correct value to which parameter Dry run cosphi is to be set depends on:

- The type of motor (construction and winding data). Generally, three-phase surface motors have a higher rated cosphi than submersible motors having the same power rating.
- The type of pump (hydraulic performance and power consumption curve).
- The power supply characteristics (voltage and frequency).

In general, the parameter Dry run cosphi may be set to 60% of the nominal cosphi shown on the pump's data plate.

Parameter Dry run cosphi must also be determined empirically at the end of the installation. In the presence of centrifugal pumps with three-phase asynchronous motor, a simple method consists in starting the pump at the rated frequency and, paying attention to the sustainability of the system, completely closing the delivery and then reading the measured cosphi value on the display (or on the App). Parameter Dry run cosphi must therefore be set to 10% less than the cosphi value read under closed flow condition.

CAUTION

The electronic water shortage protection based on parameter Dry run cosphi works correctly only with centrifugal pumps equipped with three-phase asynchronous motors.

In the presence of permanent magnet motors it is not possible to base the water shortage protection on the cosphi reading; it must be based on the absorbed power, instead.

When parameter Motor type is set to Synchronous PM, parameter Dry run cosphi takes on the meaning of a percentage of the absorbed power.

In the presence of other types of pumps and motors, it is advisable to contact the technical support service.

WARNING

If parameter Dry run cosphi is set too low, the electronic water shortage protection may no longer be effective.

Typically, it is recommended not to go below the value of 0.5 with centrifugal surface pumps and 0.4 with centrifugal submersible pumps equipped with asynchronous three-phase motor.

Setting parameter Dry run cosphi to 0 completely excludes the water shortage protection.

15. EC Declaration of Conformity

The manufacturer hereby:

Nastec srl

Via della Tecnica, 8, 36048, Barbarano Mossano, Vicenza, Italy

declares under its own responsibility that the product:

VASCO - VAriable Speed COntroller

complies with the following directives:

- 2014/53 / EU Radio Equipment Directive (RED)
- 2011/65 / EU - RoHS Directive

and that the following harmonized standards and technical specifications have been applied:

- EN 61000-6-4:2007 + A1:2011
- EN 61000-3-2:2011
- EN 61000-3-3:2000
- EN 61000-6-2:2005 + AC:2005
- EN 61800-3:2004 + A1:2012
- EN 62233:2008
- ETSI EN 301 489-17 V3.1.1:2017
- ETSI EN 301 489-1 V2.1.1:2017
- ETSI EN 300 328 V2.1.1:2016-11
- EN 60529:1991 + A1:2000 + A2:2013
- EN 60335-1:2012 + AC:2014 + A11:2014 + A13:2017
- EN 50581:2012

Barbarano Mossano
23/01/2021
Ing. Marco Nassuato
Managing Director

16. UK Declaration of Conformity

The manufacturer hereby:

Nastec srl

Via della Tecnica, 8, 36048, Barbarano Mossano, Vicenza, Italy

declares, under its own responsibility, that the product:

VASCO - VAriable Speed COntroller

complies with the following directives:

- UK SI 2017 No. 1206 Radio Equipment Regulations 2017
- UK SI 2012 No. 3032. Restriction of the Use of Certain Hazardous Substances in Electrical and Electronic Equipment Regulations 2012 (RoHS2)

and that the following harmonised standards and technical specifications have been applied:

- BS EN 61000-6-4:2007 + A1:2011
- BS EN 61000-3-2:2011
- BS EN 61000-3-3:2000
- BS EN 61000-6-2:2005 + AC:2005
- BS EN 61800-3:2004 + A1:2012
- BS EN 62233:2008
- ETSI EN 301 489-17 V3.1.1:2017
- ETSI EN 301 489-1 V2.1.1:2017
- ETSI EN 300 328 V2.1.1:2016-11
- BS EN 60529:1991 + A1:2000 + A2:2013
- BS EN 60335-1:2012 + AC:2014 + A11:2014 + A13:2017
- BS EN 50581:2012

Barbarano Mossano
02/03/2022
Ing. Marco Nassuato
Managing Director