ANDO TECHNIK
Tel.: 040/8224565-0
www.ando-technik.com

WASTEWATER SUBMERSIBLE MOTOR PUMP MODEL DKE

TECHNICAL DATA BOOK 50Hz

EBARA Corporation
EBARA DENSAN (TAIWAN) MFG. CO., LTD.

October, 2024

EBARA

Table of Contents

1. Specifications

2. Performance Chart / Model Code

3. Selection Chart

4. Dimensions

5. Sectional View

6. Performance Curves

7. QDC Selection

8. Mechanical Seals, Lubrication & Bearings

9. Motor Protection

10. Cable Specifications

11. Motor Data for Model DKE

EBARA Submersible Sewage Pumps — Model DKE

Specifications — 50Hz

Scope	Discharge	65 — 300 mm	
	Motor Power	1.5 — 45 kW (3 phase)	
	Performance	Capacity : 0.07 — 13 m^3/min Head : 3 — 44 m	
Liquid	Type	Sewage	
	Temperature	0 — 40°C	
	Max.Diameter of Solids (mm)	Φ65 : 40 Φ80 : 50 (5.5 to 7.5 kW : 38) Φ100 : 45 (3.7 to 15 kW : 50) Φ150 : 50 (22 to 45kW:78)	Φ200 : 57 (18.5 to 22 kW :80) (30 to 45 kW :78) Φ250 : 57 (30 to 45 kW :86) Φ300 : 86
Submergence	Maximum	7 m	
	Minimum	Refer to low water level (L.W.L) in dimensions.	
Construction	Impeller	Back swept semi-open	
	Mechanical Seal	Oil lubricated, double mechanical seal single spring up to 22 kW, tandem spring 30 and 45 kW	
	Bearing	Prelubricated ball bearing	
	Protection	Miniature thermal protector, Leakage detector (float type)	
Materials	Casing	Cast iron	
	Impeller	Cast iron	
	Suction Cover	Cast iron	
	Shaft	403 Stainless steel	
	Motor Frame	Cast iron	
	Fasteners	304 Stainless steel	
	Mechanical Seal	Upper Face : Carbon / Ceramic Lower Face : Sillicon Carbide / Sillicon Carbide Lubricating Oil : Turbine Oil VG32 (SAE 10W / 20W)	
Motor	Type	Air filled dry submersible, IP68, Class H insulation	
	Number of poles	4 pole	
	Applicable Voltages	380 / 400 / 415 Volts 3 phase 50 Hz	
	Starting	DOL (up to 7.5 kW) Star-Delta (11 to 45 kW)	
Cable	Length	10 m	
Accessories	Flange	Pump legs&bend pipe Quick Discharge Connector (QDC)	

Performance Chart

50Hz

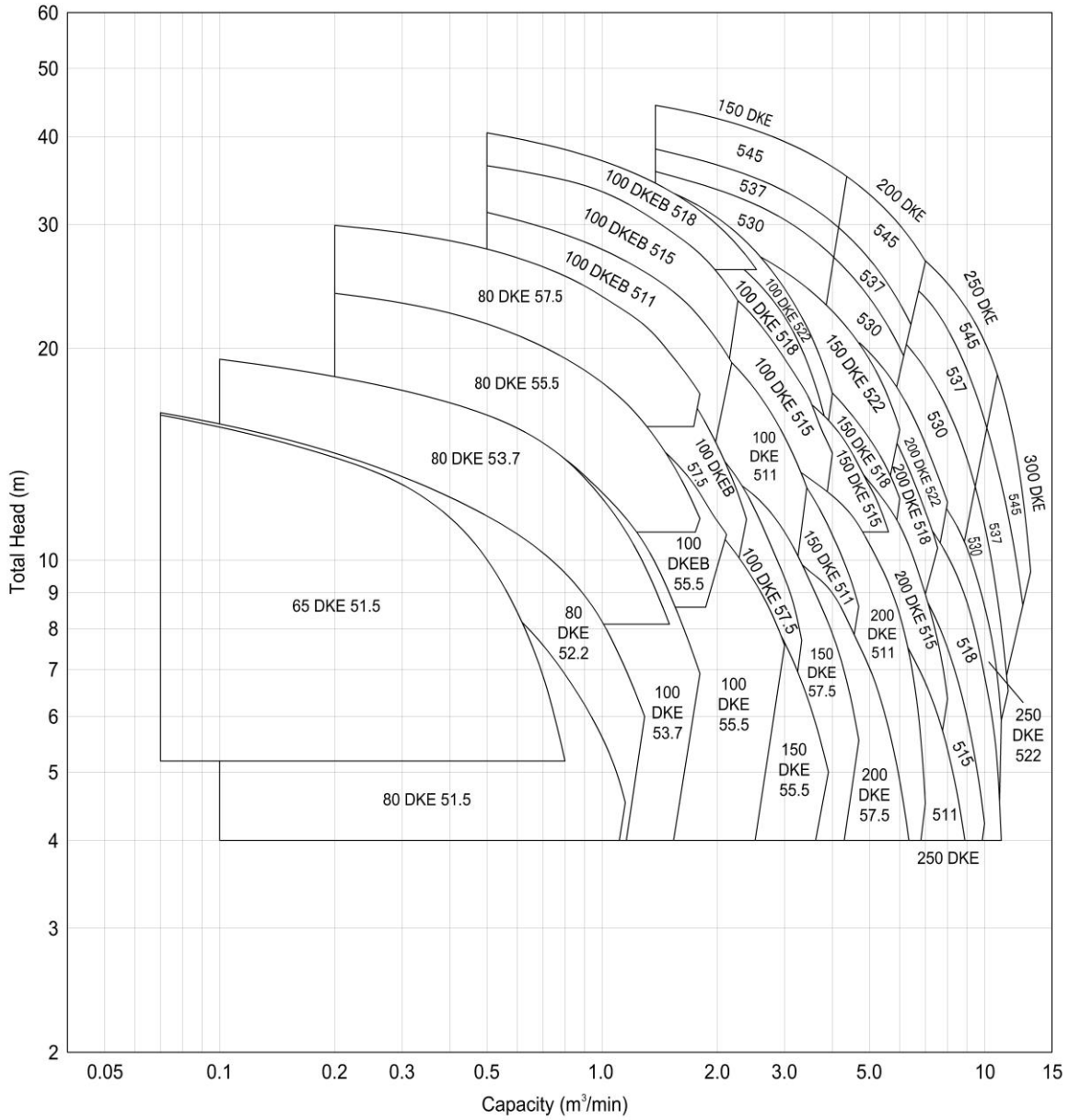

Model code

80 DKE 5 1.5

- 1.5 — Motor output (kW)
- 5 — Frequency (5 = 50 Hz)
- DKE — Model
- 80 — Discharge size (mm)

65DKE, 80DKE

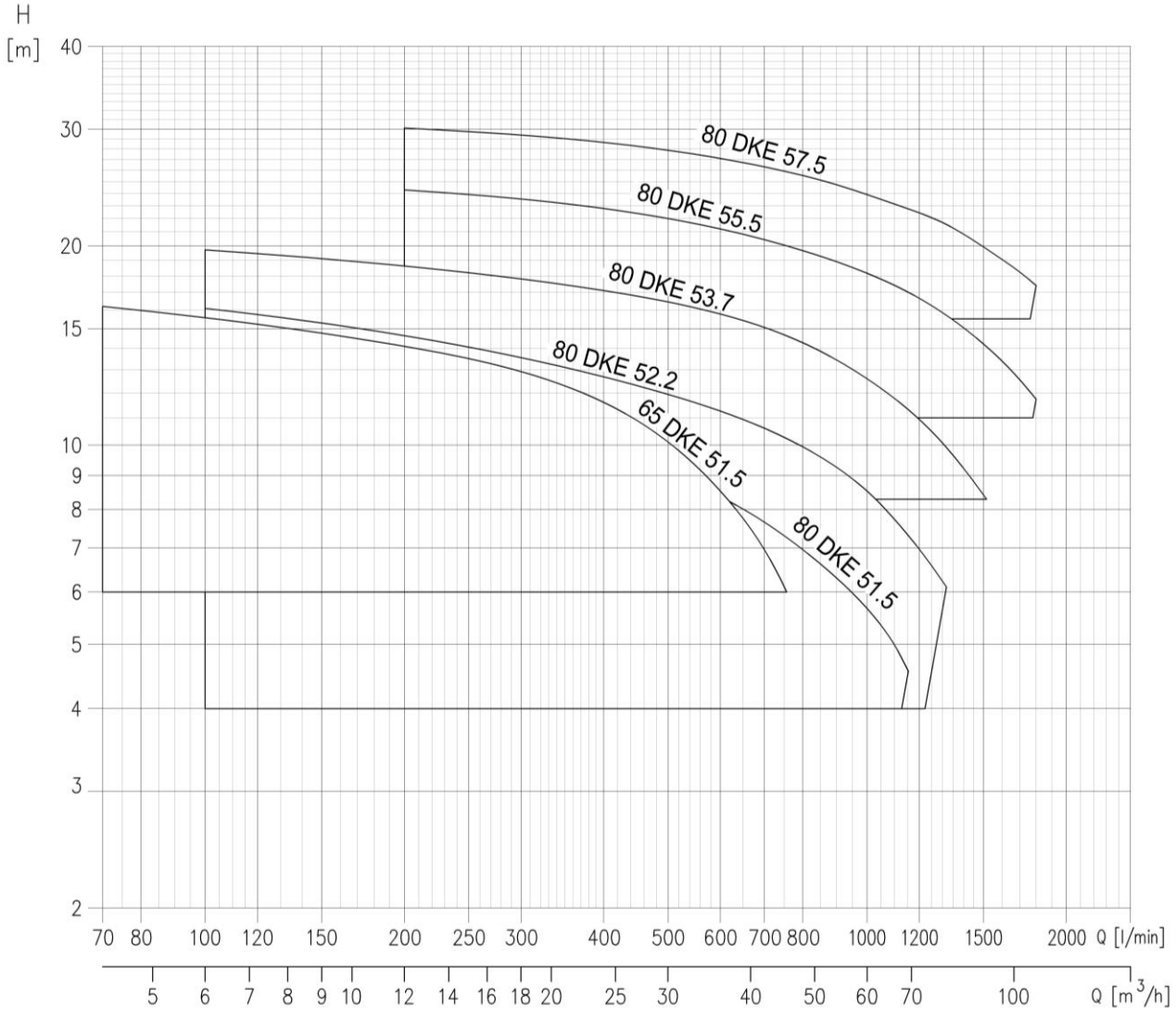

Pump Type	Power		Q=Capacity													
			l/min 0	70	100	150	200	450	600	800	900	1000	1150	1300	1500	1800
	[kW]	[HP]	m^3/h 0	4.2	6	9	12	27	36	48	54	60	69	78	90	108
			H=Total manometric head in meter													
65DKE51.5	1.5	2	18.3	16.2	15.6	14.8	14.1	10.9	8.5	5.3	-	-	-	-		-
80DKE51.5	1.5	2	12.8	-	11.7	11.3	10.9	9.4	8.4	7.0	6.3	5.7	4.6	-	-	-
80DKE52.2	2.2	3	17.9	-	16.1	15.3	14.7	12.3	11.3	9.9	9.2	8.5	7.3	6.2	-	-
80DKE53.7	3.7	5	21.2	-	-	-	18.6	16.8	15.8	14.3	13.4	12.6	11.3	10.1	8.4	-
80DKE55.5	5.5	7.5	25.4	-	-	-	24.3	22.4	21.2	19.7	18.9	18.1	17.0	15.8	14.2	11.7
80DKE57.5	7.5	10	31.5	-	-	-	30.1	28.3	27.1	25.5	24.7	23.9	22.7	21.5	19.9	17.4

100DKEB

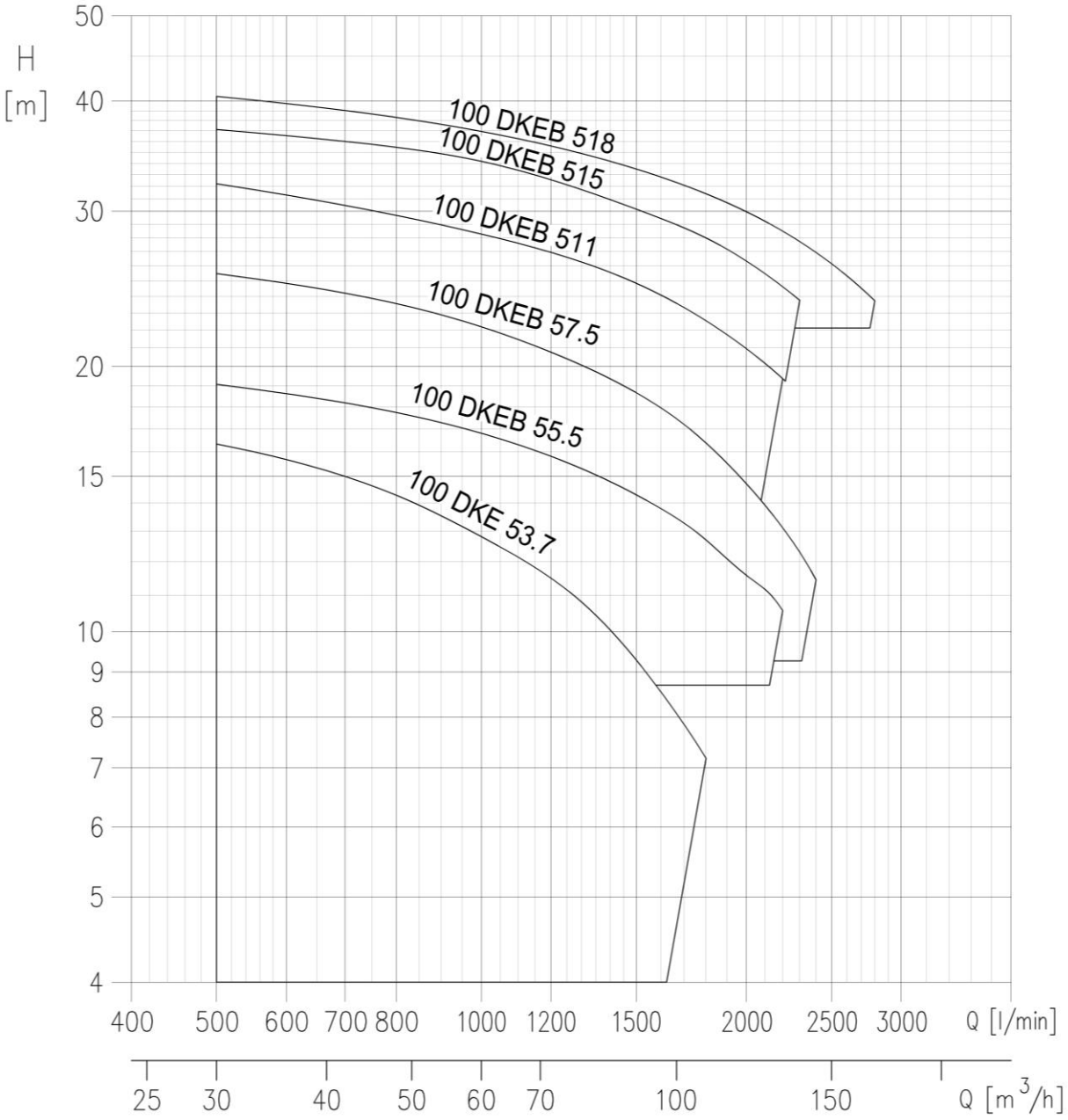

Pump Type	Power		Q=Capacity													
			l/min 0	500	700	900	1000	1200	1500	1800	2000	2200	2300	2400	2500	2800
	[kW]	[HP]	m^3/h 0	30	42	54	60	72	90	108	120	132	138	144	150	168
			H=Total manometric head in meter													
100DKE53.7	5.5	7.5	20.9	16.3	15.0	13.6	12.9	11.4	9.2	7.2	-	-	-	-	-	-
100DKEB55.5	5.5	7.5	21.8	19.1	18.1	17.2	16.8	15.9	14.4	12.8	11.7	10.5	-	-	-	-
100DKEB57.5	7.5	10	28.6	25.5	24.2	22.9	22.2	20.8	18.6	16.4	14.8	13.1	12.2	11.3	-	-
100DKEB511	11	15	35.1	32.2	30.9	29.5	28.8	27.2	24.9	22.5	20.9	19.4	-	-	-	-
100DKEB515	15	20	40.7	37.2	36.0	34.8	34.1	32.7	30.4	28.0	26.3	24.6	23.8	-	-	-
100DKEB518	18.5	25	44.1	40.5	39.1	37.6	36.9	35.6	33.5	31.4	30.0	28.5	27.7	26.9	26.2	23.7

100DKE

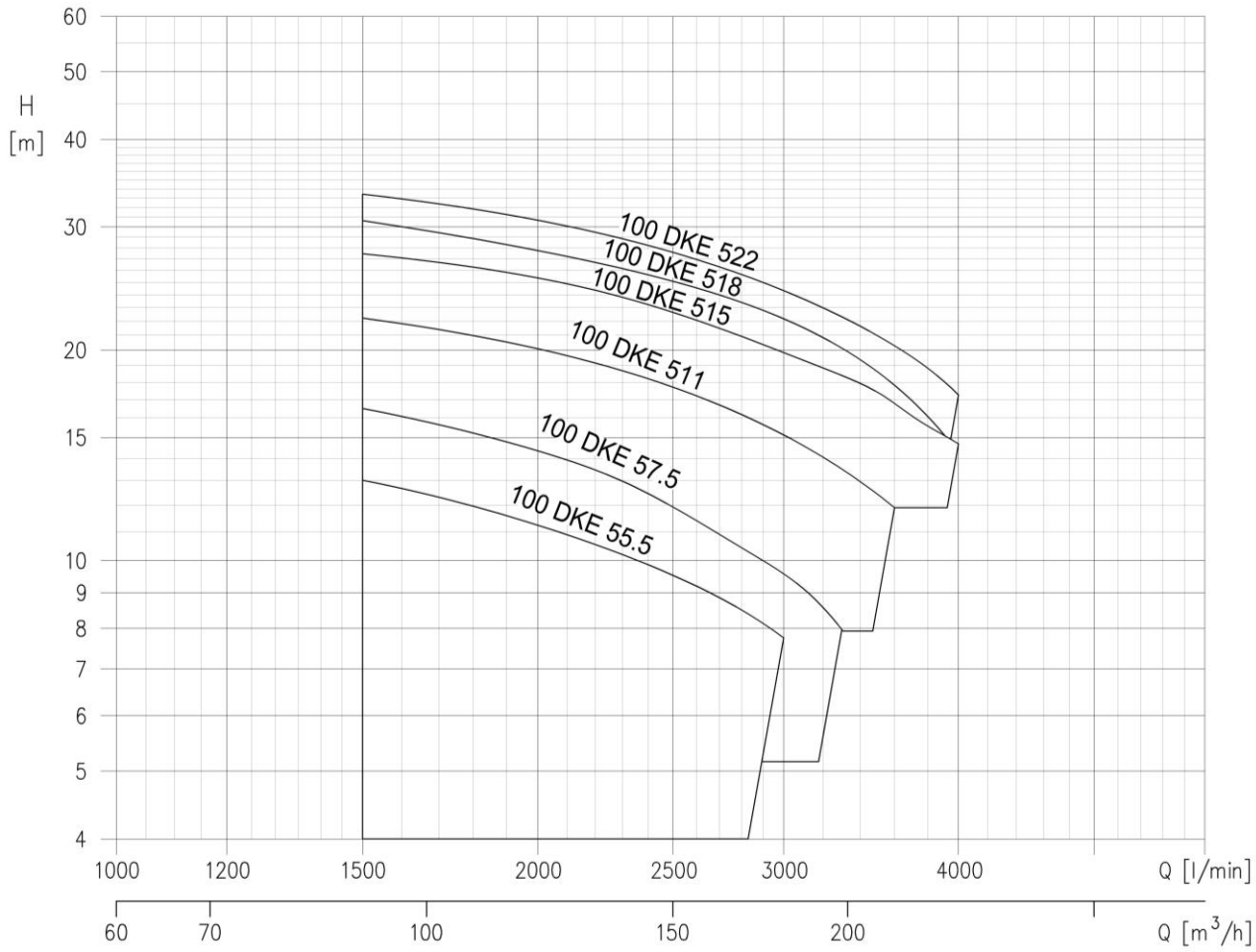

Pump Type	Power		Q=Capacity													
			l/min 0	1500	1700	1800	1900	2000	2200	2400	2600	2800	3000	3300	3600	4000
	[kW]	[HP]	m^3/h 0	90	102	108	114	120	132	144	156	168	180	198	216	240
			H=Total manometric head in meter													
100DKE55.5	5.5	7.5	17.8	13.0	12.4	12.0	11.7	11.3	10.6	9.9	9.2	8.5	7.7	-	-	-
100DKE57.5	7.5	10	22.9	16.5	15.7	15.3	14.8	14.4	13.5	12.5	11.6	10.6	9.6	8.1	-	-
100DKE511	11	15	28.7	22.2	21.4	21.0	20.5	20.1	19.2	18.2	17.2	16.2	15.1	13.5	11.9	-
100DKE515	15	20	33.9	27.5	26.6	26.2	25.7	25.3	24.3	23.3	22.3	21.2	20.1	18.5	16.9	14.7
100DKE518	18.5	25	39.5	30.6	29.4	28.9	28.3	27.8	26.7	25.6	24.5	23.4	22.2	20.1	17.8	14.2
100DKE522	22	30	41.7	33.4	32.3	31.7	31.1	30.5	29.3	28.0	26.8	25.5	24.2	22.3	20.3	17.2

150DKE

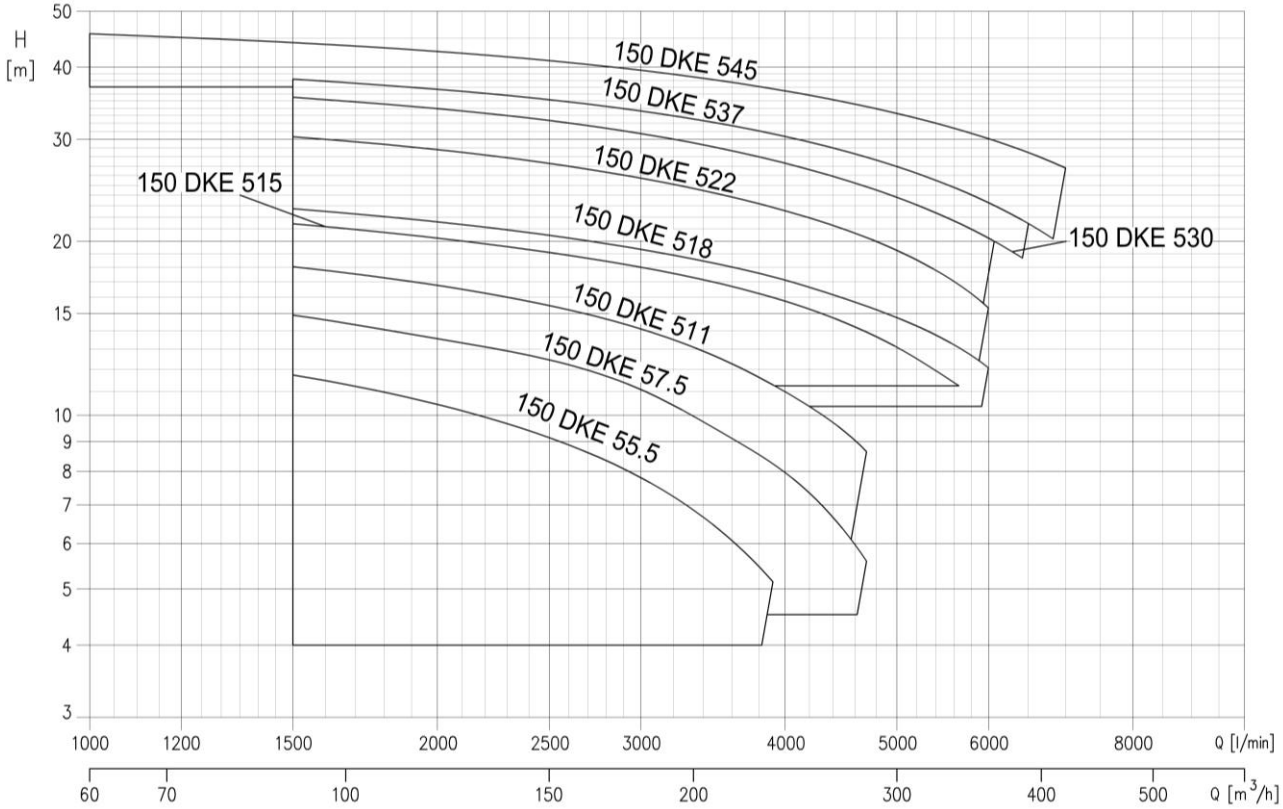

Pump Type	Power		Q=Capacity													
			l/min 0	1000	1500	2000	3000	3500	3900	4700	5000	5600	6000	6200	6500	7000
	[kW]	[HP]	m^3/h 0	60	90	120	180	210	234	282	300	336	360	372	390	420
			H=Total manometric head in meter													
150DKE55.5	5.5	7.5	15.1	-	11.7	10.5	7.8	6.4	5.2	-	-	-	-	-	-	-
150DKE57.5	7.5	10	18.1	-	14.9	13.7	11.1	9.6	8.3	5.6	-	-	-	-	-	-
150DKE511	11	15	22.5	-	18.1	16.8	14.0	12.5	11.3	8.7	-	-	-	-	-	-
150DKE515	15	20	25.5	-	21.5	20.3	18.0	16.9	16.0	13.9	13.1	11.4	-	-	-	-
150DKE518	18.5	25	26.8	-	22.7	21.6	19.4	18.3	17.4	15.4	14.7	13.0	11.9	-	-	-
150DKE522	22	30	34.9	-	30.3	28.8	25.7	24.2	22.9	20.3	19.3	17.0	15.3	-	-	-
150DKE530	30	40	39.1	-	35.5	34.0	30.7	29.0	27.6	24.9	23.8	21.7	20.3	19.5	-	-
150DKE537	37	50	42.7	-	38.1	36.7	33.6	32.0	30.7	28.0	26.9	24.8	23.3	22.6	21.5	-
150DKE545	45	60	48.8	45.7	44.2	42.6	39.5	38.0	36.7	34.2	33.3	31.4	30.1	29.5	28.5	26.8

200DKE

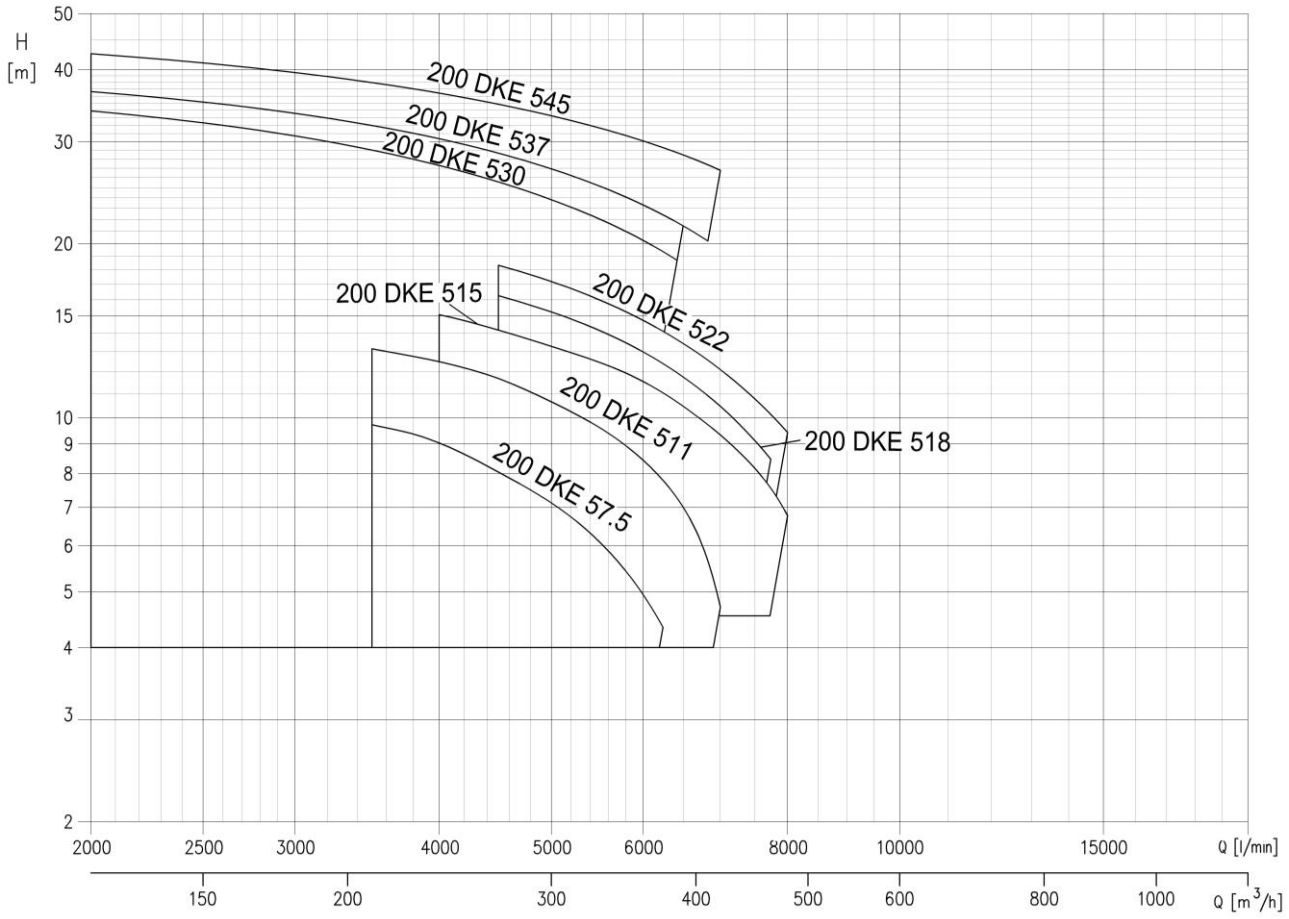

Pump Type	Power		Q=Capacity													
			l/min 0	2000	3000	3500	4000	4500	5000	5500	6000	6200	6500	7000	7500	8000
	[kW]	[HP]	m^3/h 0	120	180	210	240	270	300	330	360	372	390	420	450	480
			H=Total manometric head in meter													
200DKE57.5	7.5	10	15.2	-	-	9.8	9.0	8.1	7.1	6.0	4.9	4.4	-	-	-	-
200DKE511	11	15	19.2	-	-	13.4	12.6	11.7	10.7	9.6	8.4	7.8	6.8	4.7	-	-
200DKE515	15	20	21.5	-	-	-	15.0	14.2	13.3	12.4	11.4	11.0	10.4	9.4	8.2	6.8
200DKE518	18.5	25	26.2	-	-	-	-	16.3	15.2	14.1	13.0	12.5	11.8	10.5	9.1	-
200DKE522	22	30	27.8	-	-	-	-	18.3	17.2	16.0	14.7	14.2	13.4	12.1	10.8	9.4
200DKE530	30	40	39.1	34.0	30.7	29.0	27.3	25.6	23.8	22.1	20.3	19.5	-	-	-	-
200DKE537	37	50	42.7	36.7	33.6	32.0	30.4	28.7	26.9	25.2	23.3	22.6	21.5	-	-	-
200DKE545	45	60	48.8	42.6	39.5	38.0	36.4	34.8	33.3	31.7	30.1	29.5	28.5	26.8	-	-

250DKE, 300DKE

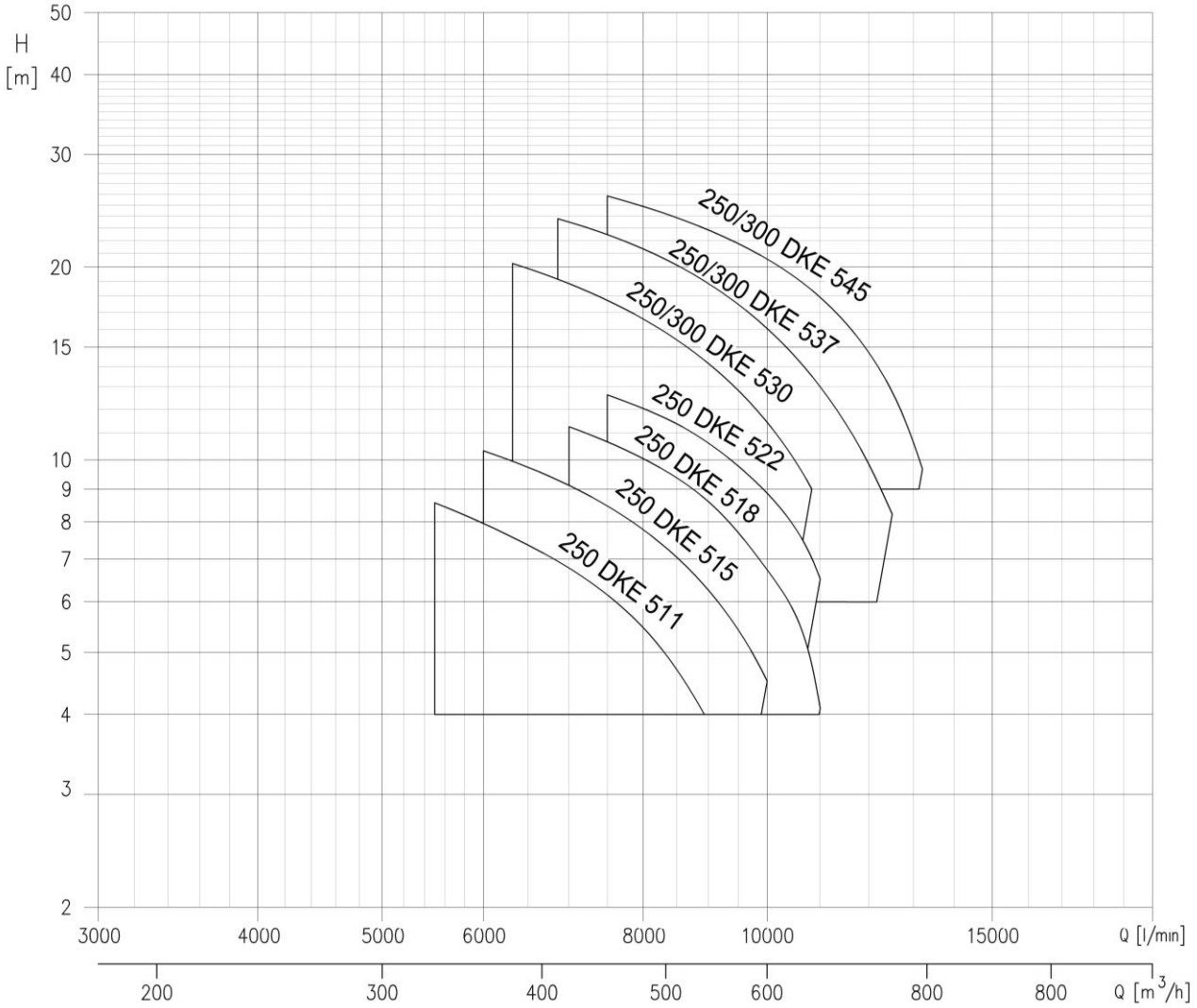

Pump Type	Power		Q=Capacity													
			l/min 0	5500	6000	6300	6800	7000	7500	8000	8900	10000	10800	11000	12500	13200
	[kW]	[HP]	m^3/h 0	330	360	378	408	420	450	480	534	600	648	660	750	792
			H=Total manometric head in meter													
250DKE511	11	15	14.2	8.4	7.9	7.6	7.0	6.8	6.2	5.5	4.1	-	-	-	-	-
250DKE515	15	20	16.6	-	10.3	10.0	9.4	9.1	8.5	7.8	6.4	4.5	-	-	-	-
250DKE518	18.5	25	18.0	-	-	-	-	11.2	10.7	10.0	8.8	6.7	4.7	4.1	-	-
250DKE522	22	30	19.5	-	-	-	-	-	12.7	12.1	10.8	8.8	7.0	6.5	-	-
250/300 DKE530	30	40	27.9	-	-	20.3	19.3	18.8	17.7	16.6	14.4	11.4	9.1	-	-	-
250/300DKE537	37	50	31.8	-	-	-	23.9	23.5	22.5	21.4	19.1	16.0	13.6	13.0	8.3	-
250/300DKE545	45	60	34.8	-	-	-	-	-	25.8	24.9	23.1	20.6	18.5	17.9	12.9	9.8

Dimensions 50Hz

- **DKE IE3 without QDC**

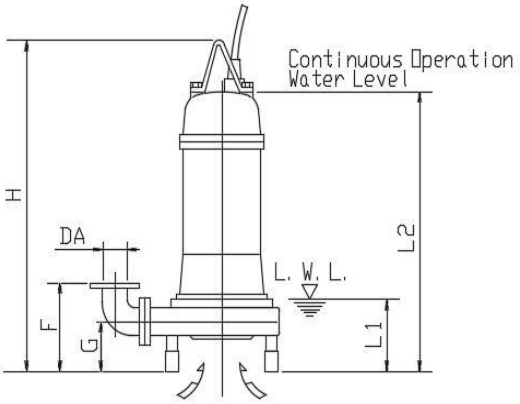

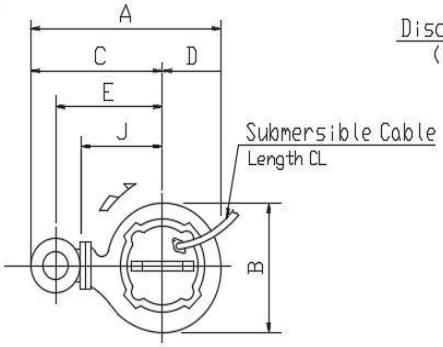

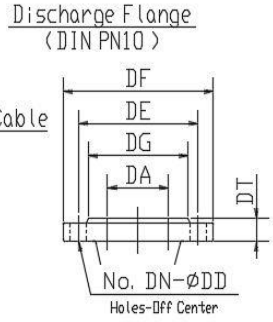

Unit : mm

DA	DE	DF	DG	DT	DN	DD
65	145	185	118	20	4	18
80	160	200	138	22	8	18
100	180	220	158	24	8	18
150	240	285	211	26	8	22
200	295	340	266	26	8	22
250	350	395	319	30	12	22

Note:

1/. L.W.L(Low Water Level)Is limited to 10 minutes operations at low water level.

2/. Is limited to 30 minutes operation with water level below top of motor.

Unit : mm

DA	Pump model	Output KW	A	B	C	D	E	F	G	H	J	L1	L2	CL m	Weight kg
65	65 DKE 51.5	1.5	580	294	433	147	340	357	217	769	200	265	675	10	61
80	80 DKE 51.5	1.5	632	295	484	148	384	370	206	765	220	262	671	10	60
	80 DKE 52.2	2.2	637	294	492	146	392	370	206	855	228	260	755	10	77
	80 DKE 53.7	3.7	661	323	506	155	406	370	206	848	242	267	748	10	88
	80 DKE 55.5	5.5	698	375	517	181	417	370	206	941	253	262	841	10	100
	80 DKE 57.5	7.5	744	394	550	194	450	370	206	941	286	262	841	10	133
100	100 DKEB 55.5	5.5	802	384	609	193	499	430	226	964	295	285	864	10	127
	100 DKEB 57.5	7.5	827	414	624	203	514	430	226	964	310	285	864	10	142
	100 DKEB 511	11	827	414	624	203	514	430	226	1063	310	285	903	10	175
	100 DKEB 515	15	854	436	639	215	529	430	226	1155	325	292	995	10	214
	100 DKEB 518	18.5	869	449	644	225	534	459	255	1177	330	321	1017	10	236
100	100 DKE 53.7	3.7	771	333	609	162	499	430	226	868	295	287	768	10	95
	100 DKE 55.5	5.5	816	414	609	207	499	480	276	993	295	376	893	10	132
	100 DKE 57.5	7.5	828	411	621	207	511	479	275	993	307	376	893	10	141
	100 DKE 511	11	840	438	624	216	514	479	275	1104	310	378	944	10	178
	100 DKE 515	15	867	456	642	226	532	479	275	1212	328	349	1052	10	212
	100 DKE 518	18.5	892	458	663	229	553	425	221	1137	349	293	977	10	231
	100 DKE 522	22	892	458	663	229	553	425	221	1137	349	293	977	10	244
150	150 DKE 55.5	5.5	953	422	744	209	601	584	300	1003	317	386	903	10	137
	150 DKE 57.5	7.5	953	422	744	209	601	584	300	1003	317	386	903	10	145
	150 DKE 511	11	993	479	751	242	608	560	276	1101	324	375	941	10	186
	150 DKE 515	15	1015	480	771	244	628	584	300	1211	344	405	1051	10	211
	150 DKE 518	18.5	1015	480	771	244	628	584	300	1225	344	405	1065	10	232
	150 DKE 522	22	1094	524	832	263	689	636	352	1270	405	435	1110	10	292
200	200 DKE 57.5	7.5	1177	513	921	256	751	675	308	1035	384	418	935	10	176
	200 DKE 511	11	1202	533	935	267	765	675	308	1130	398	404	970	10	213
	200 DKE 515	15	1212	557	934	278	764	700	333	1238	397	432	1078	10	240
	200 DKE 518	18.5	1304	618	1000	305	830	733	366	1290	463	455	1130	10	318
	200 DKE 522	22	1304	618	1000	305	830	733	366	1290	463	455	1130	10	330
250	250 DKE 511	11	1370	594	1074	297	876	815	364	1206	425	480	1046	10	238
	250 DKE 515	15	1370	594	1074	297	876	815	364	1286	425	480	1126	10	261
	250 DKE 518	18.5	1370	594	1074	297	876	815	364	1300	425	480	1140	10	281
	250 DKE 522	22	1370	594	1074	297	876	815	364	1300	425	480	1140	10	294

• Applicable Models – DKE IE3 with QDC LM65DI, LM80DI

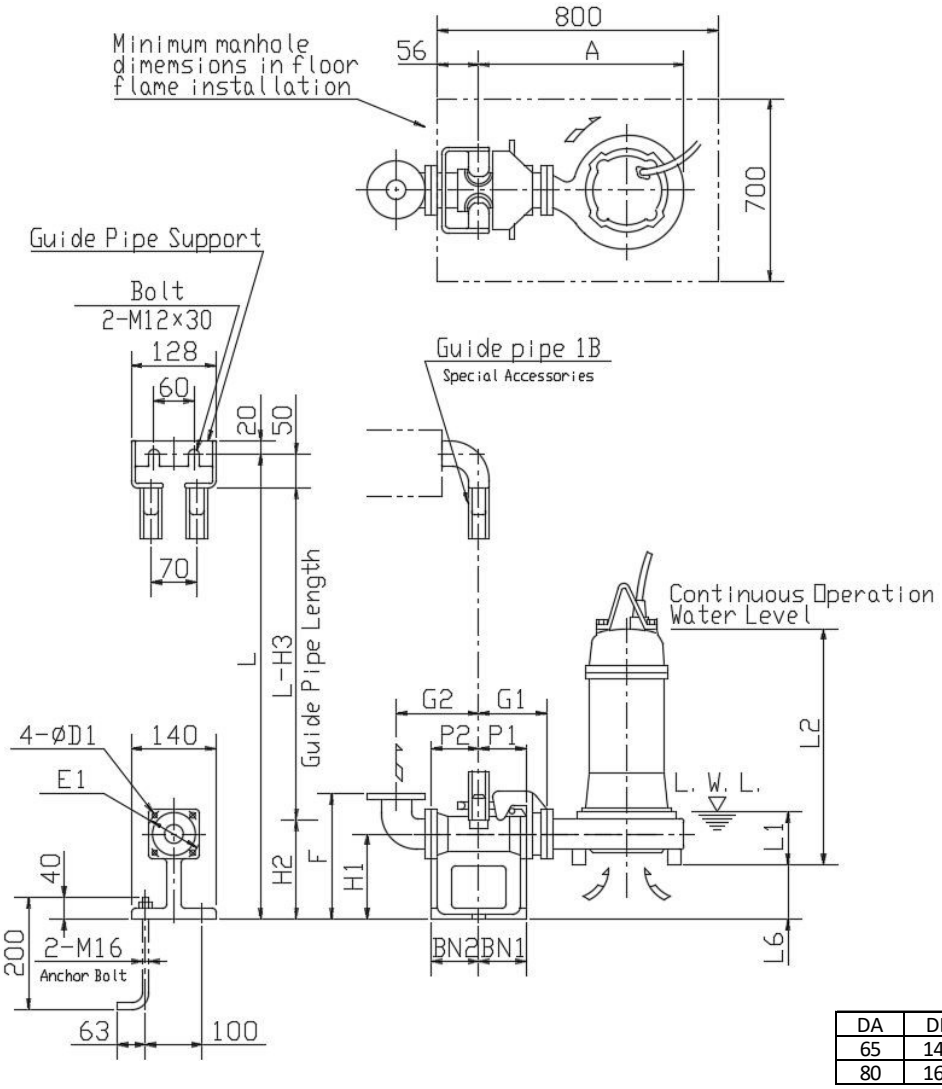

Note:

1/. For detailed dimensions of the pumps, refer to separate dimension data sheets.

2/. The weight in dimension tables refers only to the weight of the QDC.

3/. Standard accessories supplied with QDC include:-
- -Connector body with foundation bolts.
- -Guide pipe support
- -Sliding Glide
- -Adaptor Flange

Guide Pipe is not supplied.

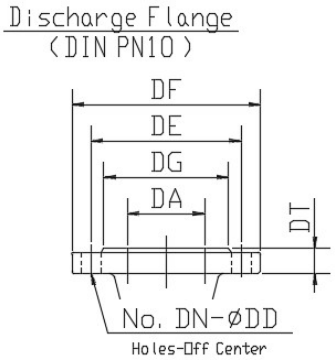

Unit : mm

DA	DE	DF	DG	DT	DN	DD
65	145	185	118	20	4	18
80	160	200	138	22	8	18

Unit : mm

DA	QDC model	Pump model	Quick discharge connector																Weight kg
			A	P1	P2	G1	G2	F	H1	H2	H3	L1	L2	L6	BN1	BN2	D1	E1	
65	LM65DI	65 DKE 51.5	467	75	95	120	160	250	145	190	240	165	575	29	75	95	12	140	14
80	LM80DI	80 DKE 51.5	493	75	90	125	165	285	175	230	280	162	571	69	75	90	15	155	17
		80 DKE 52.2	498	75	90	125	165	285	175	230	280	160	655	69	75	90	15	155	17
		80 DKE 53.7	522	75	90	125	165	285	175	230	280	167	648	69	75	90	15	155	17

- **Applicable Models – DKE IE3 with QDC LL80DI**

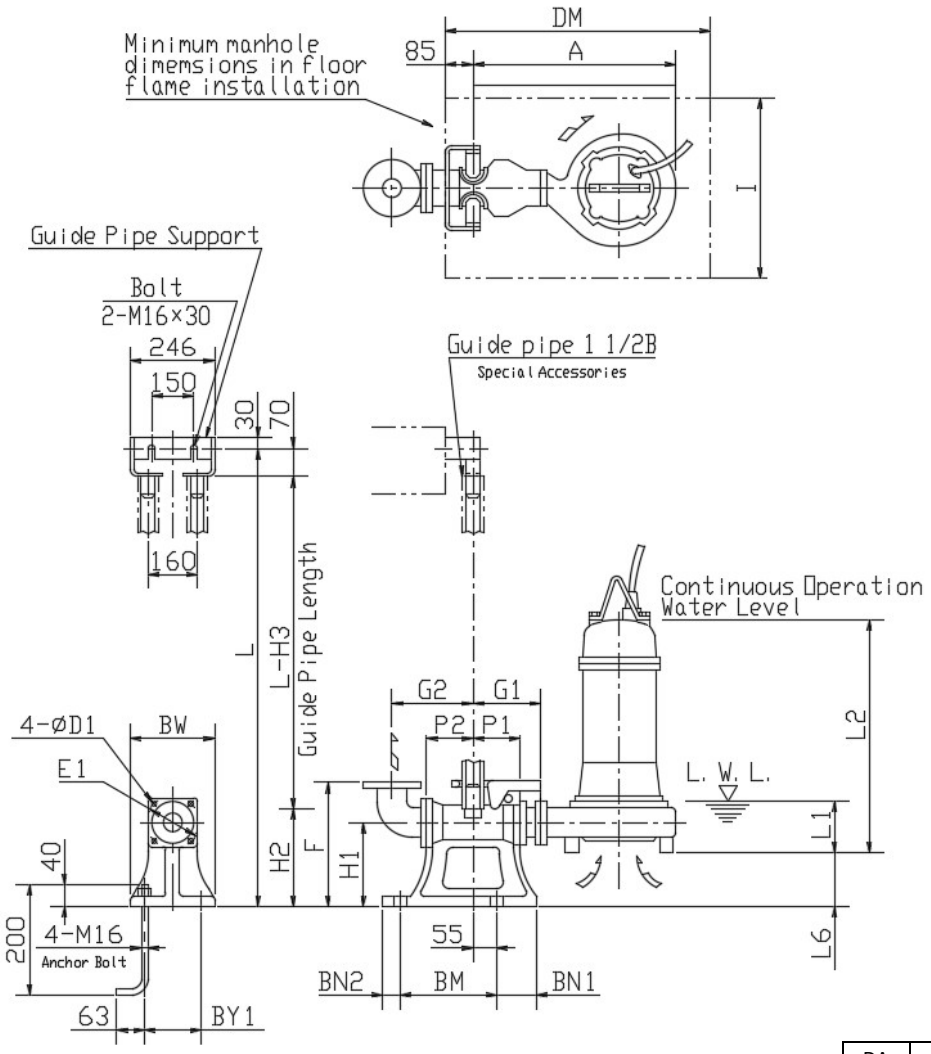

Note:

1/. For detailed dimensions of the pumps, refer to separate dimension data sheets.

2/. The weight in dimension tables refers only to the weight of the QDC.

3/. Standard accessories supplied with QDC include: -
- -Connector body with foundation bolts.
- -Guide pipe support
- -Sliding Glide
- -Adaptor Flange

Guide Pipe is not supplied.

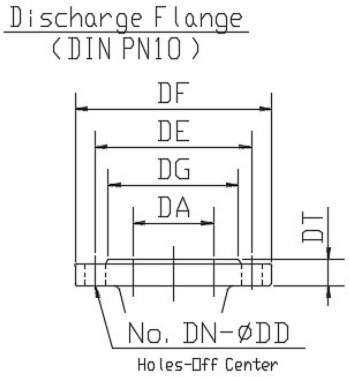

Unit : mm

DA	DE	DF	DG	DT	DN	DD
80	160	200	138	18	8	18

Unit : mm

DA	QDC model	Pump model	Quick discharge connector																				Weight kg
			A	P1	P2	G1	G2	F	H1	H2	H3	L1	L2	L6	BN1	BN2	BM	BY1	BW	DM	I	D1	E1	
80	LL80DI	80 DKE 55.5	619	105	120	185	195	350	240	255	325	162	741	134	100	40	220	180	230	800	700	15	155	44
		80 DKE 57.5	665	105	120	185	195	350	240	255	325	162	741	134	100	40	220	180	230	800	700	15	155	44

- **Applicable Models – DKE IE3 with QDC LL100F**

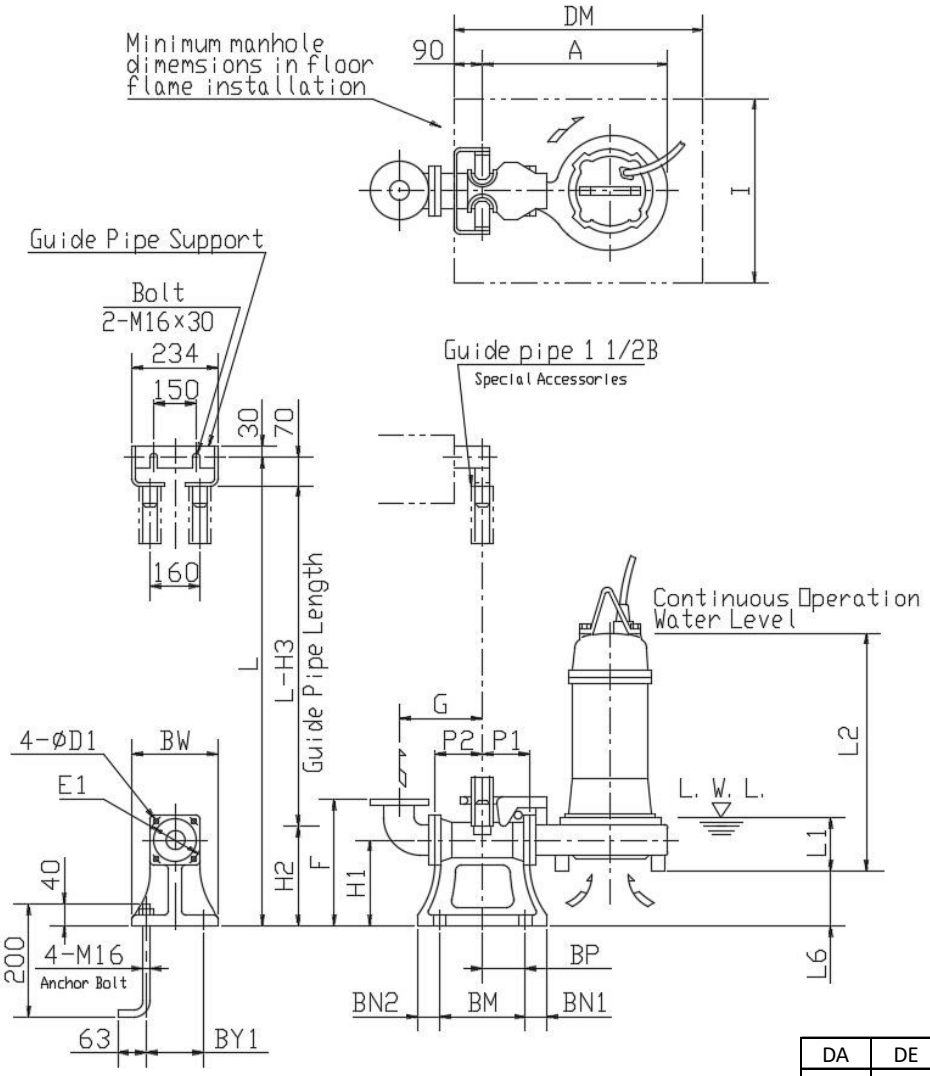

Note:

1/. For detailed dimensions of the pumps, refer to separate dimension data sheets.

2/. The weight in dimension tables refers only to the weight of the QDC.

3/. Standard accessories supplied with QDC include: -
- -Connector body with foundation bolts.
- -Guide pipe support
- -Sliding Glide
- -Adaptor Flange

Guide Pipe is not supplied.

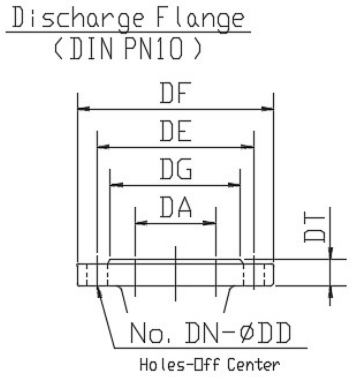

Unit : mm

DA	DE	DF	DG	DT	DN	DD
100	180	220	158	24	8	18

Unit : mm

DA	QDC model	Pump model	Quick discharge connector																					Weight kg
			A	P1	P2	G	F	H1	H2	H3	L1	L2	L6	BN1	BN2	BM	BP	BY1	BW	DM	I	D1	E1	
100	LL100F	100 DKEB 55.5	593	105	105	210	365	240	265	335	185	764	114	100	40	220	55	180	230	800	700	19	175	46
		100 DKEB 57.5	618	105	105	210	365	240	265	335	185	764	114	100	40	220	55	180	230	800	700	19	175	46
		100 DKEB 511	618	105	105	210	365	240	265	335	185	803	114	100	40	220	55	180	230	1000	700	19	175	46
		100 DKEB 515	645	105	105	210	365	240	265	335	192	895	115	100	40	220	55	180	230	1000	700	19	175	46
		100 DKEB 518	660	105	105	210	365	240	265	335	221	917	85	100	40	220	55	180	230	1000	700	19	175	46
100	LL100F	100 DKE 53.7	562	105	105	210	365	240	265	335	187	668	114	100	40	220	55	180	230	800	700	19	175	46
		100 DKE 55.5	607	105	105	210	365	240	265	335	226	743	114	100	40	220	55	180	230	800	700	19	175	46
		100 DKE 57.5	619	105	105	210	365	240	265	335	226	743	115	100	40	220	55	180	230	800	700	19	175	46
		100 DKE 511	631	105	105	210	365	240	265	335	228	794	115	100	40	220	55	180	230	1000	700	19	175	46
		100 DKE 515	658	105	105	210	365	240	265	335	199	902	115	100	40	220	55	180	230	1000	700	19	175	46
		100 DKE 518	683	105	105	210	365	240	265	335	193	877	119	100	40	220	55	180	230	1000	700	19	175	46
		100 DKE 522	683	105	105	210	365	240	265	335	193	877	119	100	40	220	55	180	230	1000	700	19	175	46

• Applicable Models – DKE IE3 with QDC LL150F, LL150YF

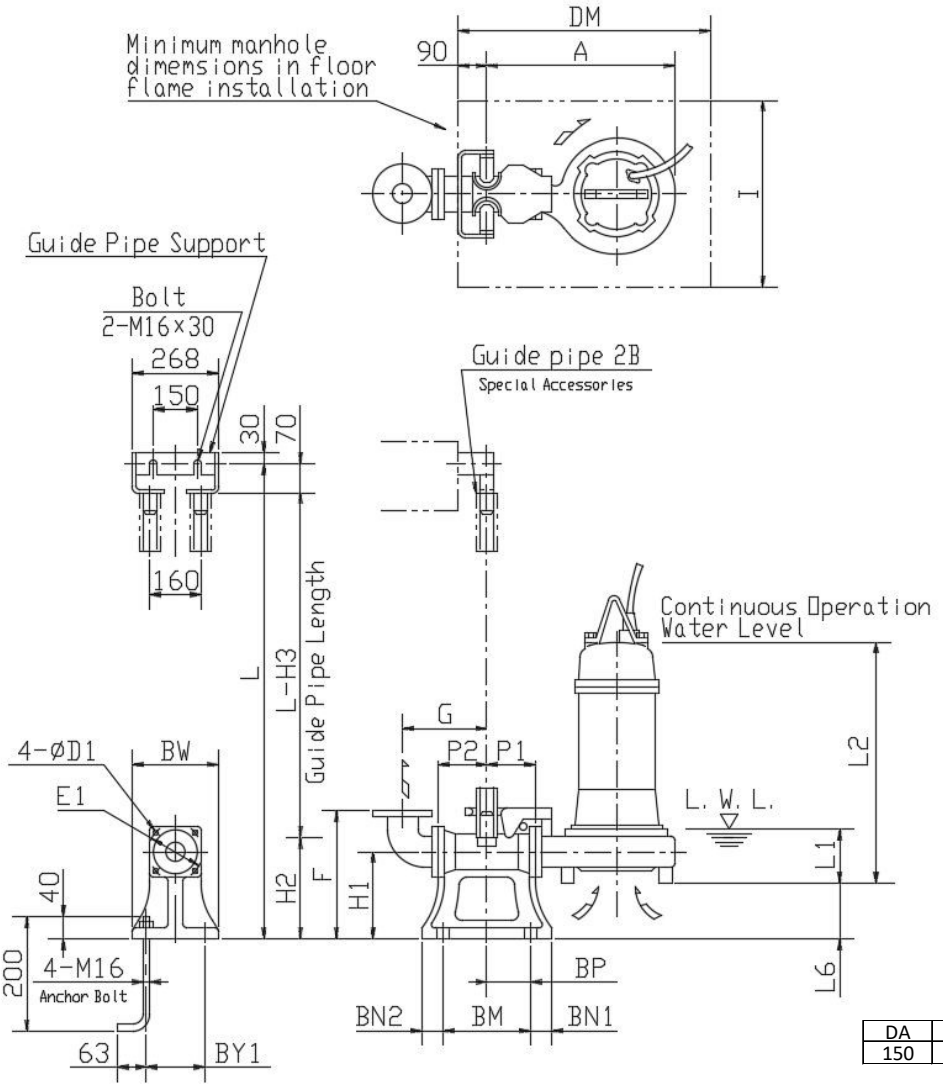

Note:

1/. For detailed dimensions of the pumps, refer to separate dimension data sheets.

2/. The weight in dimension tables refers only to the weight of the QDC.

3/. Standard accessories supplied with QDC include:-
- -Connector body with foundation bolts.
- -Guide pipe support
- -Sliding Glide
- -Adaptor Flange

Guide Pipe is not supplied.

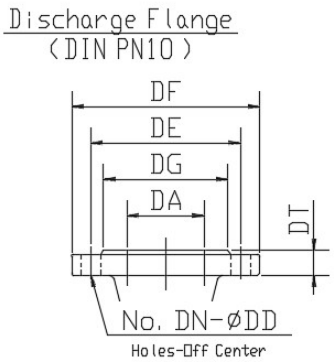

Unit : mm

DA	DE	DF	DG	DT	DN	DD
150	240	285	211	22	8	22

Unit : mm

DA	QDC model	Pump model	Quick discharge connector																					Weight kg
			A	P1	P2	G	F	H1	H2	H3	L1	L2	L6	BN1	BN2	BM	BP	BY1	BW	DM	I	D1	E1	
150	LL150F	150 DKE 55.5	681	155	205	355	480	320	405	475	236	753	170	60	60	390	170	300	350	1100	800	16	250	80
		150 DKE 57.5	681	155	205	355	480	320	405	475	236	753	170	60	60	390	170	300	350	1100	800	16	250	80
		150 DKE 511	721	155	205	355	480	320	405	475	250	816	170	60	60	390	170	300	350	1100	800	16	250	80
		150 DKE 515	743	155	205	355	480	320	405	475	255	901	170	60	60	390	170	300	350	1100	800	16	250	80
		150 DKE 518	743	155	205	355	480	320	405	475	255	915	170	60	60	390	170	300	350	1100	800	16	250	80
150	LL150YF	150 DKE 522	796	155	205	355	480	320	405	475	260	935	143	60	60	390	170	300	350	1100	800	16	250	80

- **Applicable Models – DKE IE3 with QDC LL150 (30kW~45kW)**

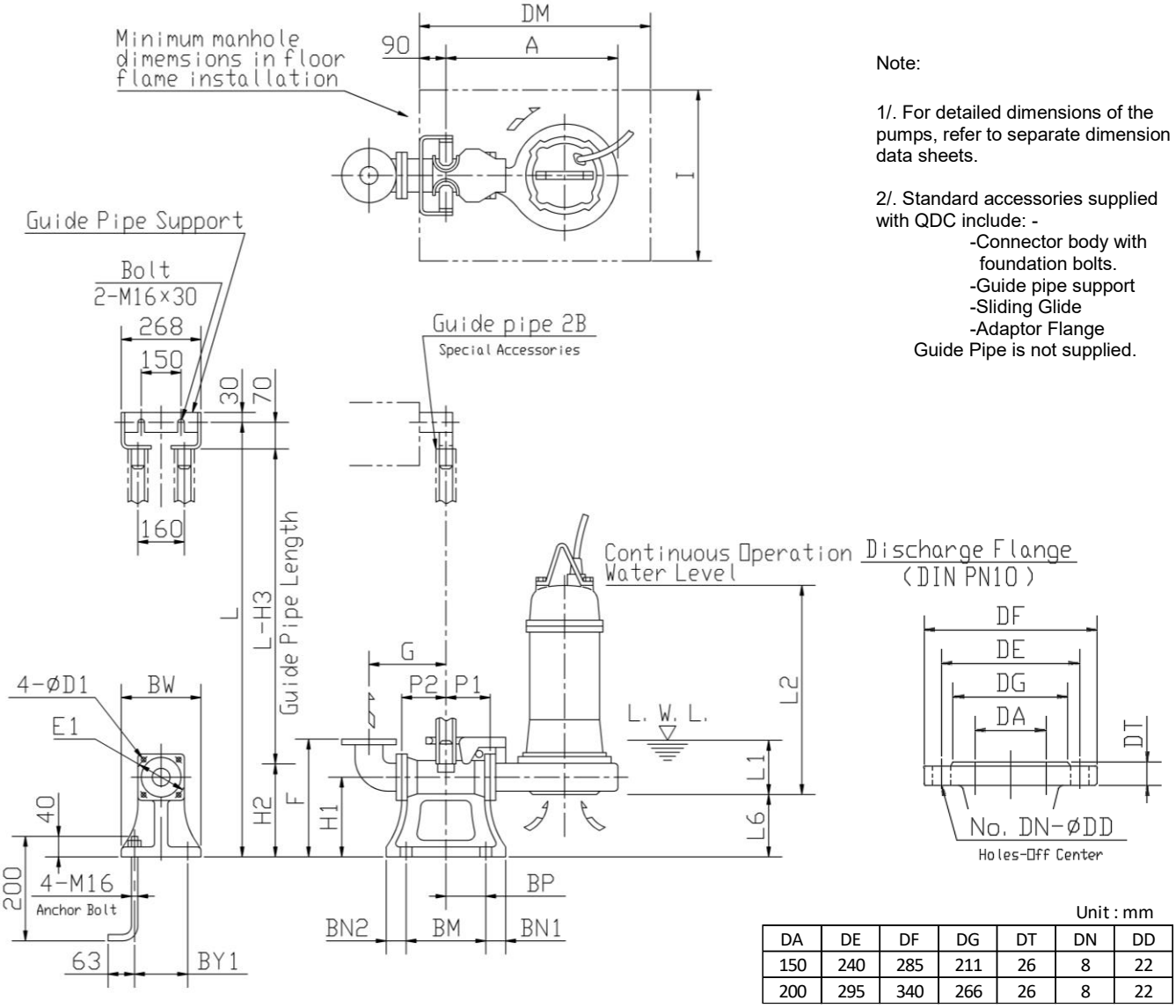

Note:

1/. For detailed dimensions of the pumps, refer to separate dimension data sheets.

2/. Standard accessories supplied with QDC include: -
- -Connector body with foundation bolts.
- -Guide pipe support
- -Sliding Glide
- -Adaptor Flange

Guide Pipe is not supplied.

Unit : mm

DA	DE	DF	DG	DT	DN	DD
150	240	285	211	26	8	22
200	295	340	266	26	8	22

Unit : mm

Size DA	QDC model	Pump model	Quick discharge connector																					Weight kg	
			A	P1	P2	G	F	H1	H2	H3	L1	L2	L6	BN1	BN2	BM	BP	BY1	BW	DM	I	D1	E1	QDC	Pump
150	LL150	150 DKE 530	777	155	205	355	480	320	405	475	215	1004	209	60	60	390	170	300	350	1100	800	16	250	80	308
		150 DKE 537	777	155	205	355	480	320	405	475	215	1112	209	60	60	390	170	300	350	1100	800	16	250	80	364
		150 DKE 545	777	155	205	355	480	320	405	475	215	1112	209	60	60	390	170	300	350	1100	800	16	250	80	386
200	LL150	200 DKE 530	777	155	205	355	495	320	405	475	215	1004	209	60	60	390	170	300	350	1100	800	16	250	80	308
		200 DKE 537	777	155	205	355	495	320	405	475	215	1112	209	60	60	390	170	300	350	1100	800	16	250	80	364
		200 DKE 545	777	155	205	355	495	320	405	475	215	1112	209	60	60	390	170	300	350	1100	800	16	250	80	386

- **Applicable Model – DKE IE3 with QDC LL250F, LL250YF, LL300F**

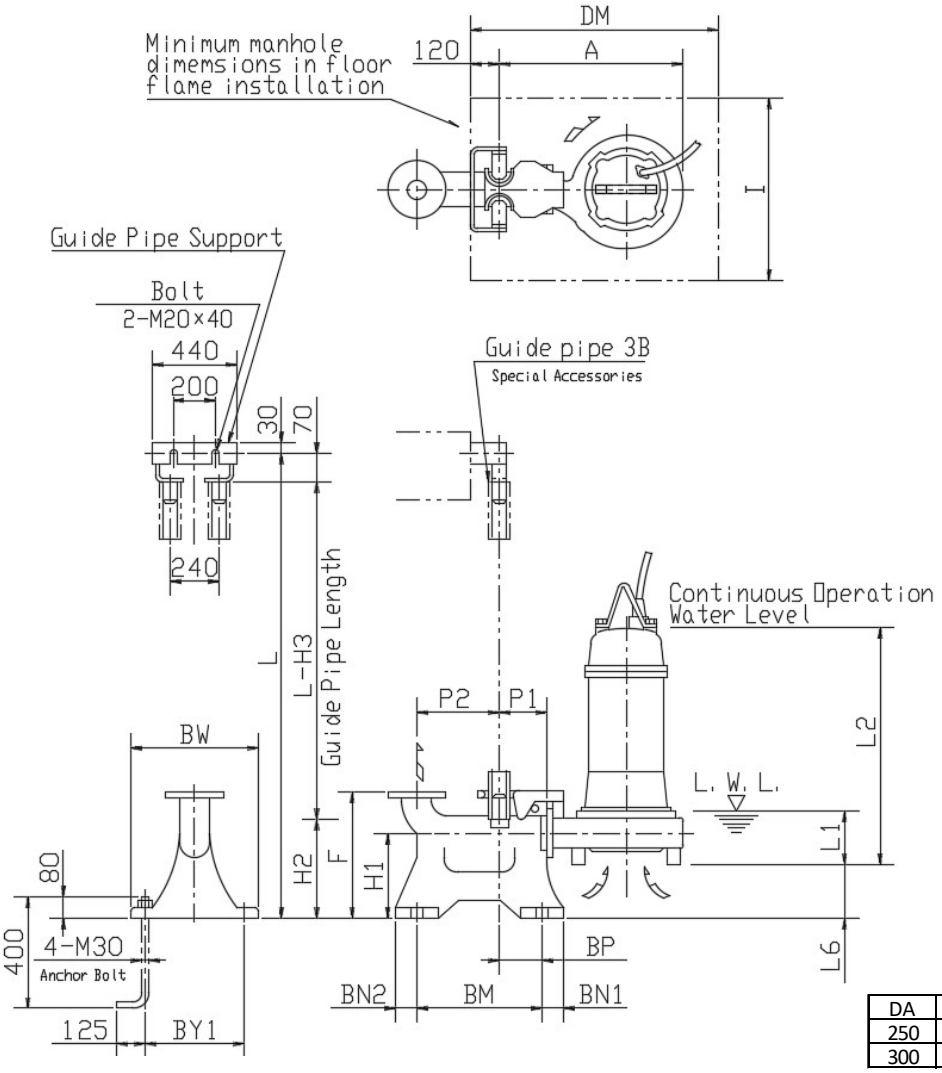

Note:

1/. For detailed dimensions of the pumps, refer to separate dimension data sheets.

2/. The weight in dimension tables refers only to the weight of the QDC.

3/. Standard accessories supplied with QDC include: -
- -Connector body with foundation bolts.
- -Guide pipe support
- -Sliding Glide
- -Adaptor Flange

Guide Pipe is not supplied.

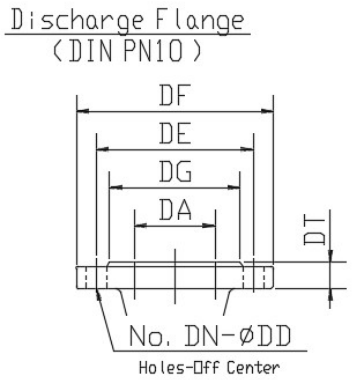

Unit : mm

DA	DE	DF	DG	DT	DN	DD
250	350	395	319	30	12	22
300	400	445	370	32	12	22

Unit : mm

DA	QDC model	Pump model	Quick discharge connector																		Weight kg
			A	P1	P2	F	H1	H2	H3	L1	L2	L6	BN1	BN2	BM	BP	BY1	BW	DM	I	
250	LL250F	200 DKE 57.5	835	195	435	700	350	440	510	293	810	167	70	70	650	215	500	560	1200	900	150
		200 DKE 511	860	195	435	700	350	440	510	279	845	167	70	70	650	215	500	560	1200	900	150
		200 DKE 515	870	195	435	700	350	440	510	282	928	167	70	70	650	215	500	560	1200	900	150
250	LL250YF	200 DKE 518	962	195	435	700	350	440	510	280	955	160	70	70	650	215	500	560	1200	900	150
		200 DKE 522	962	195	435	700	350	440	510	280	955	160	70	70	650	215	500	560	1200	900	150
300	LL300F	250 DKE 511	917	195	465	800	430	550	620	330	896	216	70	70	680	215	580	640	1200	900	200
		250 DKE 515	917	195	465	800	430	550	620	330	976	216	70	70	680	215	580	640	1200	900	200
		250 DKE 518	917	195	465	800	430	550	620	330	990	216	70	70	680	215	580	640	1200	900	200
		250 DKE 522	917	195	465	800	430	550	620	330	990	216	70	70	680	215	580	640	1200	900	200

- **Applicable Models – DKE IE3 with QDC LL300 (250DKE 30kW~45kW)**

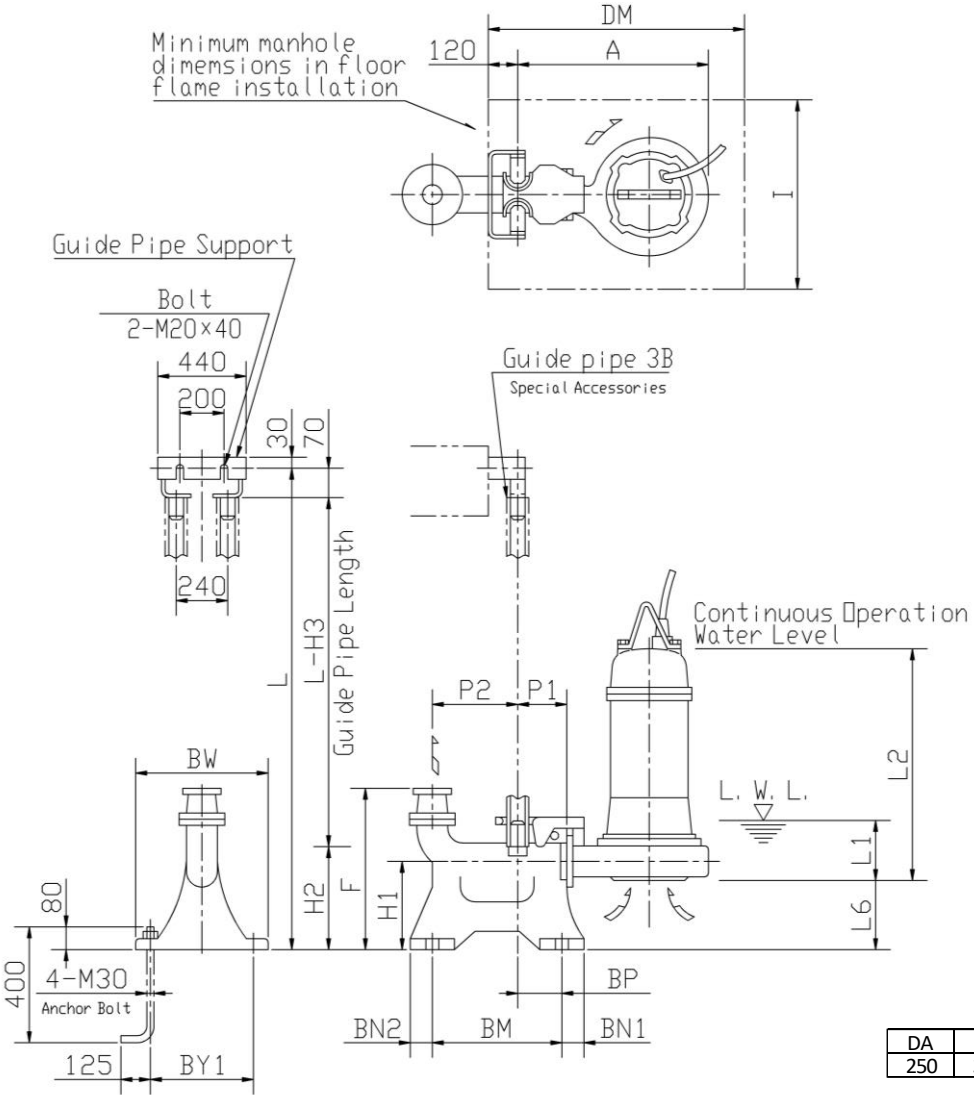

Note:

1/. For detailed dimensions of the pumps, refer to separate dimension data sheets.

2/. Standard accessories supplied with QDC include: -
- -Connector body with foundation bolts.
- -Guide pipe support
- -Sliding Glide
- -Adaptor Flange

Guide Pipe is not supplied.

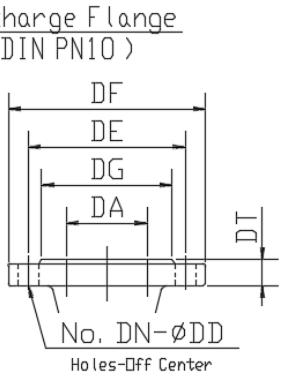

Unit : mm

DA	DE	DF	DG	DT	DN	DD
250	350	395	319	30	12	22

Unit : mm

Size DA	QDC model	Pump model	Quick discharge connector																		Weight kg	
			A	P1	P2	F	H1	H2	H3	L1	L2	L6	BN1	BN2	BM	BP	BY1	BW	DM	I	QDC	Pump
250	LL300	250 DKE 530	990	195	465	970	430	550	620	237	1001	300	70	70	680	215	580	640	1200	900	200	385
		250 DKE 537	990	195	465	970	430	550	620	237	1128	300	70	70	680	215	580	640	1200	900	200	441
		250 DKE 545	990	195	465	970	430	550	620	237	1128	300	70	70	680	215	580	640	1200	900	200	462

- **Applicable Models – DKE IE3 with QDC LL300 (300DKE 30kW~45kW)**

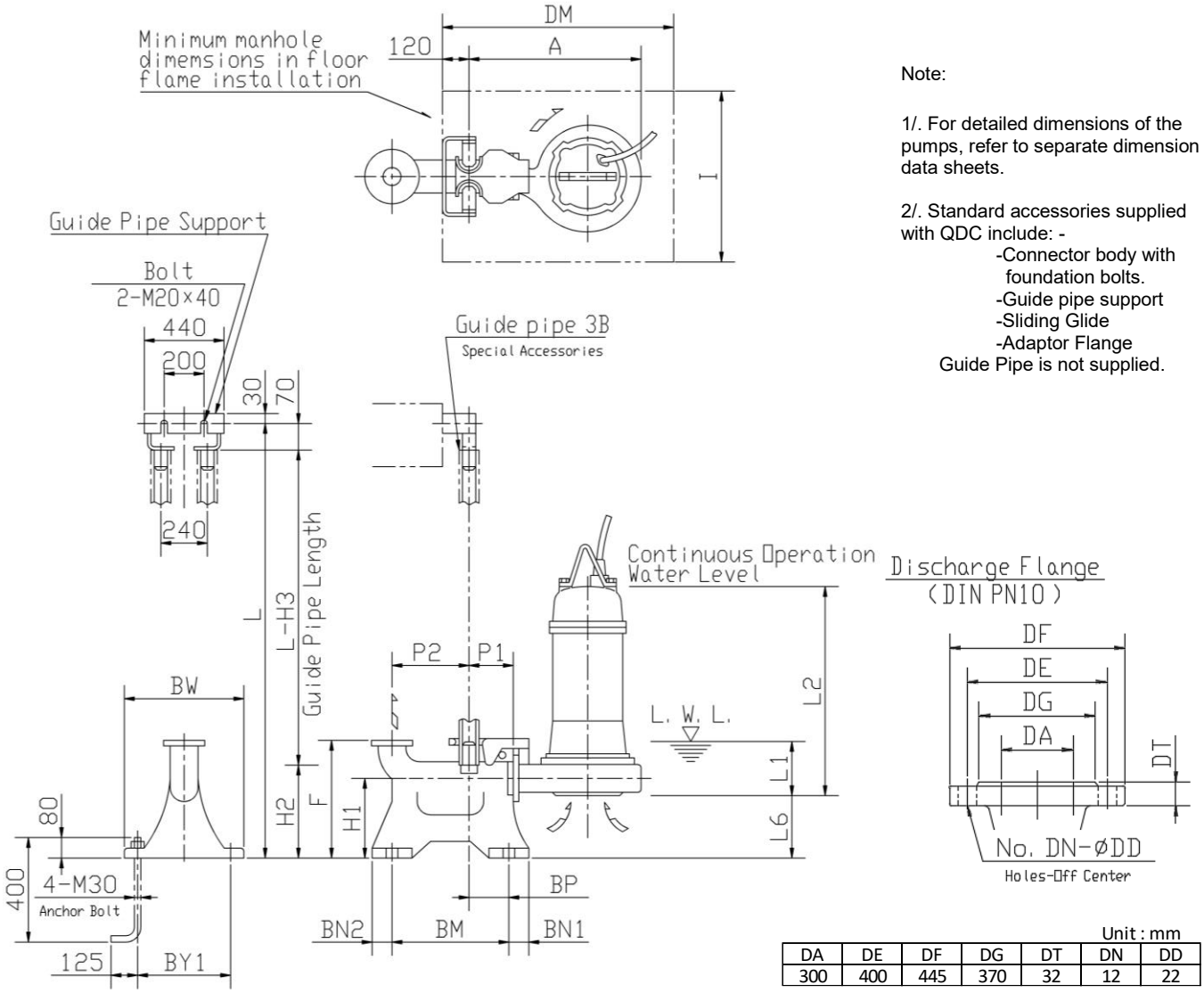

Note:

1/. For detailed dimensions of the pumps, refer to separate dimension data sheets.

2/. Standard accessories supplied with QDC include: -
- -Connector body with foundation bolts.
- -Guide pipe support
- -Sliding Glide
- -Adaptor Flange

Guide Pipe is not supplied.

Unit : mm

DA	DE	DF	DG	DT	DN	DD
300	400	445	370	32	12	22

Unit : mm

Size DA	QDC model	Pump model	Quick discharge connector																		Weight kg	
			A	P1	P2	F	H1	H2	H3	L1	L2	L6	BN1	BN2	BM	BP	BY1	BW	DM	I	QDC	Pump
300	LL300	300 DKE 530	990	195	465	800	430	550	620	237	1001	300	70	70	680	215	580	640	1200	900	200	385
		300 DKE 537	990	195	465	800	430	550	620	237	1128	300	70	70	680	215	580	640	1200	900	200	441
		300 DKE 545	990	195	465	800	430	550	620	237	1128	300	70	70	680	215	580	640	1200	900	200	462

EBARA Submersible Sewage Pumps — Model DKE

Sectional View DKE IE3 (1.5~7.5kW) — 50 Hz

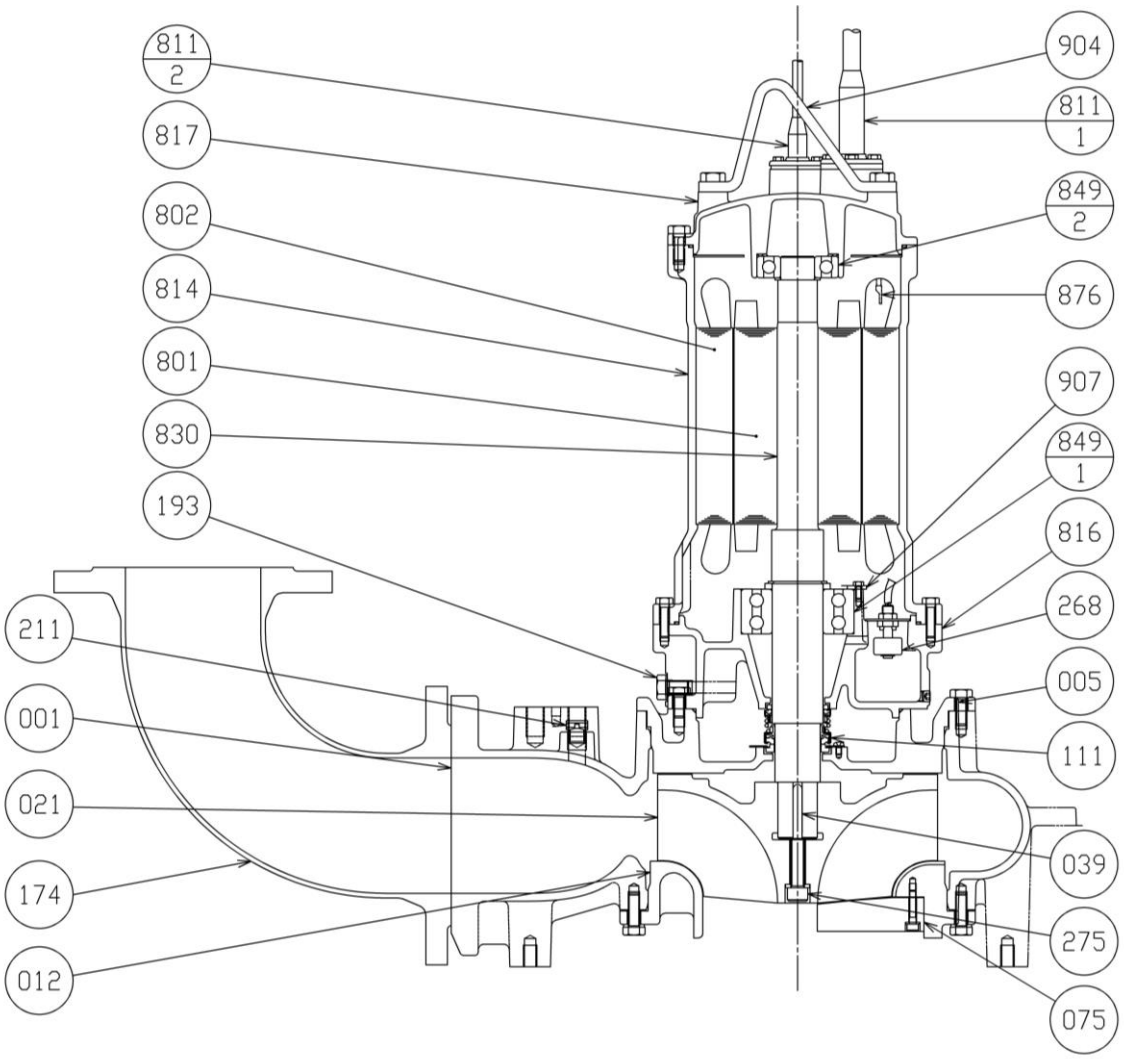

Item Number	Part Name	Material		Qty per unit
001	Pump Casing	FC250/FCD400	Cast iron/ Ductile Cast Iron	1
005	Intermediate Casing	FC250	Cast iron	1
012	Suction Cover	FC250	Cast iron	1
021	Impeller	FC250/FCD400/ FCD500	Cast iron/ Ductile Cast Iron	1
039	Key	SUS420	Stainless Steel	1
075	Guide Pin	FCD400	Ductile Cast Iron	1
111	Mechanical Seal			1
174	Discharge Bend	SS	Steel	1
193	Oil Plug	NBR / SUS304		1 set
211	Air Vent Valve	SUS304	Stainless Steel	1
268	Leakage Detector			1
275	Impeller Bolt	SUS304	Stainless Steel	1

Item Number	Part Name	Material		Qty per unit
801	Rotor			1
802	Stator			1
811-1	Submersible Cable (Power)			1
811-2	Submersible Cable (Signal)			1
814	Motor Frame	FC200	Cast iron	1
816	Power Side Braket	FC200	Cast iron	1
817	Opposite Side Braket	FC200	Cast iron	1
830	Shaft	SUS403	Stainless Steel	1
849-1	Ball Bearing			1
849-2	Ball Bearing			1
876	Thermal Protector			2
904	Lifting Hanger	SS	Steel	1
907	Bearing Cover	SUS304	Stainless Steel	1

EBARA Submersible Sewage Pumps — Model DKE

Sectional View DKE IE3 (11~22kW) — 50Hz

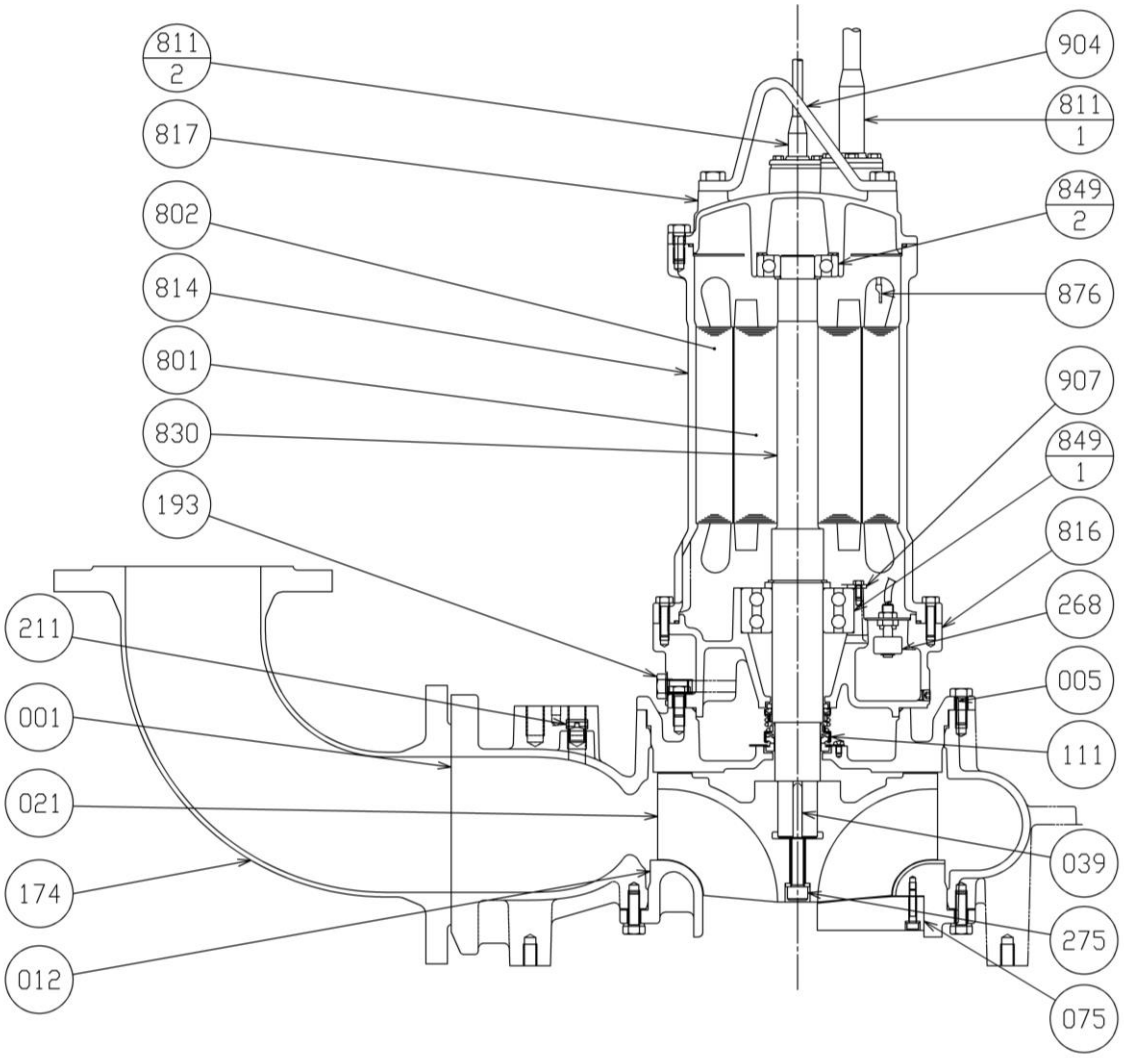

Item Number	Part Name	Material		Qty per unit
001	Pump Casing	FC250/FCD400	Cast iron/ Ductile Cast Iron	1
005	Intermediate Casing	FC250	Cast iron	1
012	Suction Cover	FC250	Cast iron	1
021	Impeller	FC250/FCD400/ FCD500	Cast iron/ Ductile Cast Iron	1
039	Key	SUS420	Stainless Steel	1
075	Guide Pin	FCD400	Ductile Cast Iron	1
111	Mechanical Seal			1
174	Discharge Bend	SS	Steel	1
193	Oil Plug	NBR / SUS304		1 set
211	Air Vent Valve	SUS304	Stainless Steel	1
268	Leakage Detector			1
275	Impeller Bolt	SUS304	Stainless Steel	1

Item Number	Part Name	Material		Qty per unit
801	Rotor			1
802	Stator			1
811-1	Submersible Cable (Power)			2
811-2	Submersible Cable (Signal)			1
814	Motor Frame	FC200	Cast iron	1
816	Power Side Braket	FC200	Cast iron	1
817	Opposite Side Braket	FC200	Cast iron	1
830	Shaft	SUS403	Stainless Steel	1
849-1	Ball Bearing			1
849-2	Ball Bearing			1
876	Thermal Protector			2
904	Lifting Hanger	SS	Steel	1
907	Bearing Cover	SUS304	Stainless Steel	1

EBARA Submersible Sewage Pumps — Model DKE

Sectional View – 150(200) DKE IE3 (30~45kW) — 50 Hz

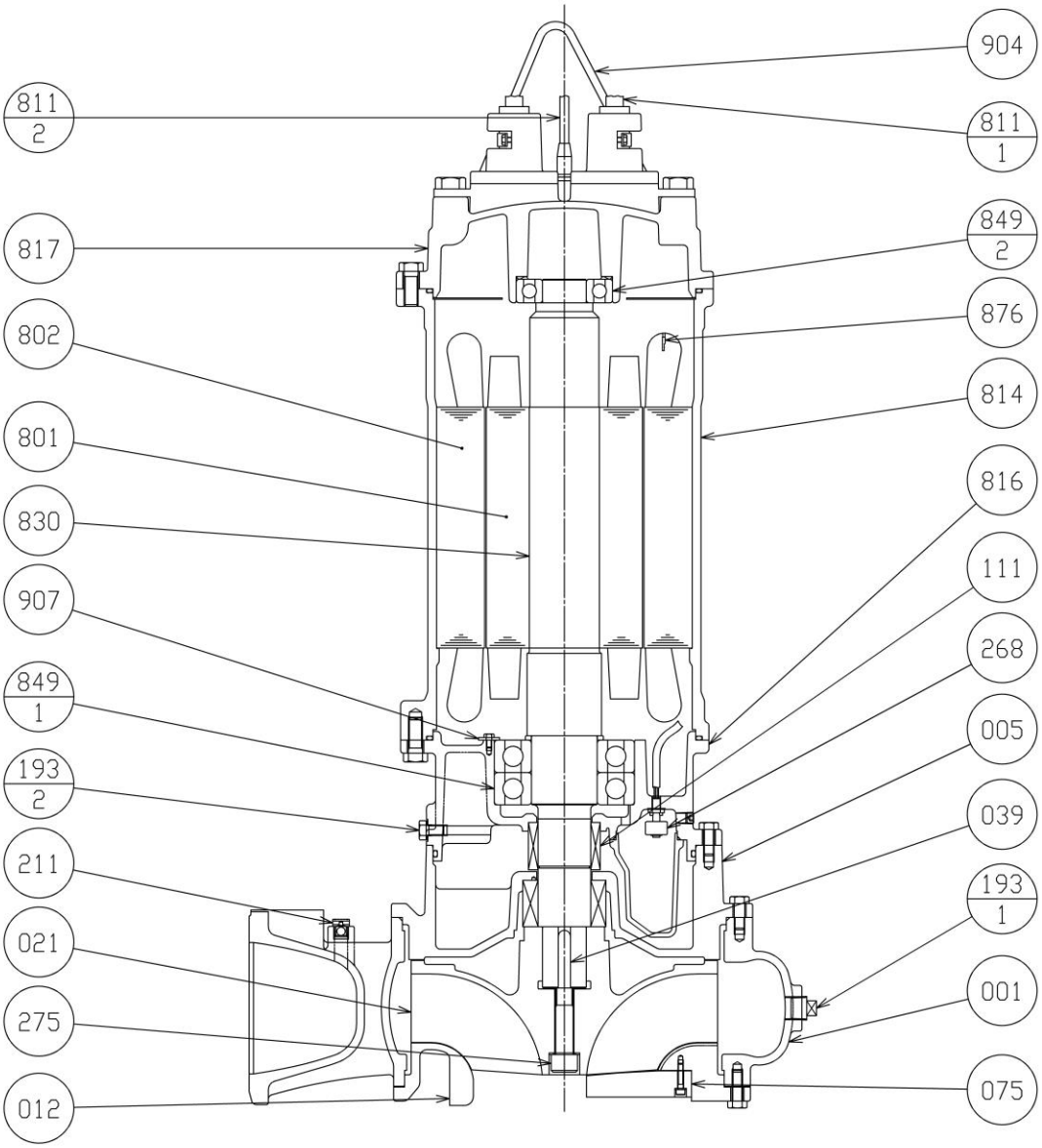

Item Number	Part Name	Material		Qty per unit
001	Pump Casing	FC250	Cast iron	1
005	Intermediate Casing	FC250	Cast iron	1
012	Suction Cover	FC250	Cast iron	1
021	Impeller	FCD400	Ductile Cast Iron	1
039	Key	SUS420	Stainless Steel	1
075	Guide Pin	FCD400	Ductile Cast Iron	1
111	Mechanical Seal			1
193-1	Plug	SUS304		2
193-2	Oil Plug	NBR / SUS304		2 set
211	Air Vent Valve	SUS304	Stainless Steel	1
268	Leakage Detector			1
275	Impeller Bolt	SUS304	Stainless Steel	1

Item Number	Part Name	Material		Qty per unit
801	Rotor			1
802	Stator			1
811-1	Submersible Cable (Power)			2
811-2	Submersible Cable (Signal)			1
814	Motor Frame	FC200	Cast iron	1
816	Power Side Braket	FC200	Cast iron	1
817	Opposite Side Braket	FC200	Cast iron	1
830	Shaft	SUS403	Stainless Steel	1
849-1	Ball Bearing			1
849-2	Ball Bearing			1
876	Thermal Protector			2
904	Lifting Hanger	SS	Steel	1
907	Bearing Cover	SPCC	Steel	1

EBARA Submersible Sewage Pumps — Model DKE

Sectional View – 250(300) DKE IE3 (30~45kW) — 50 Hz

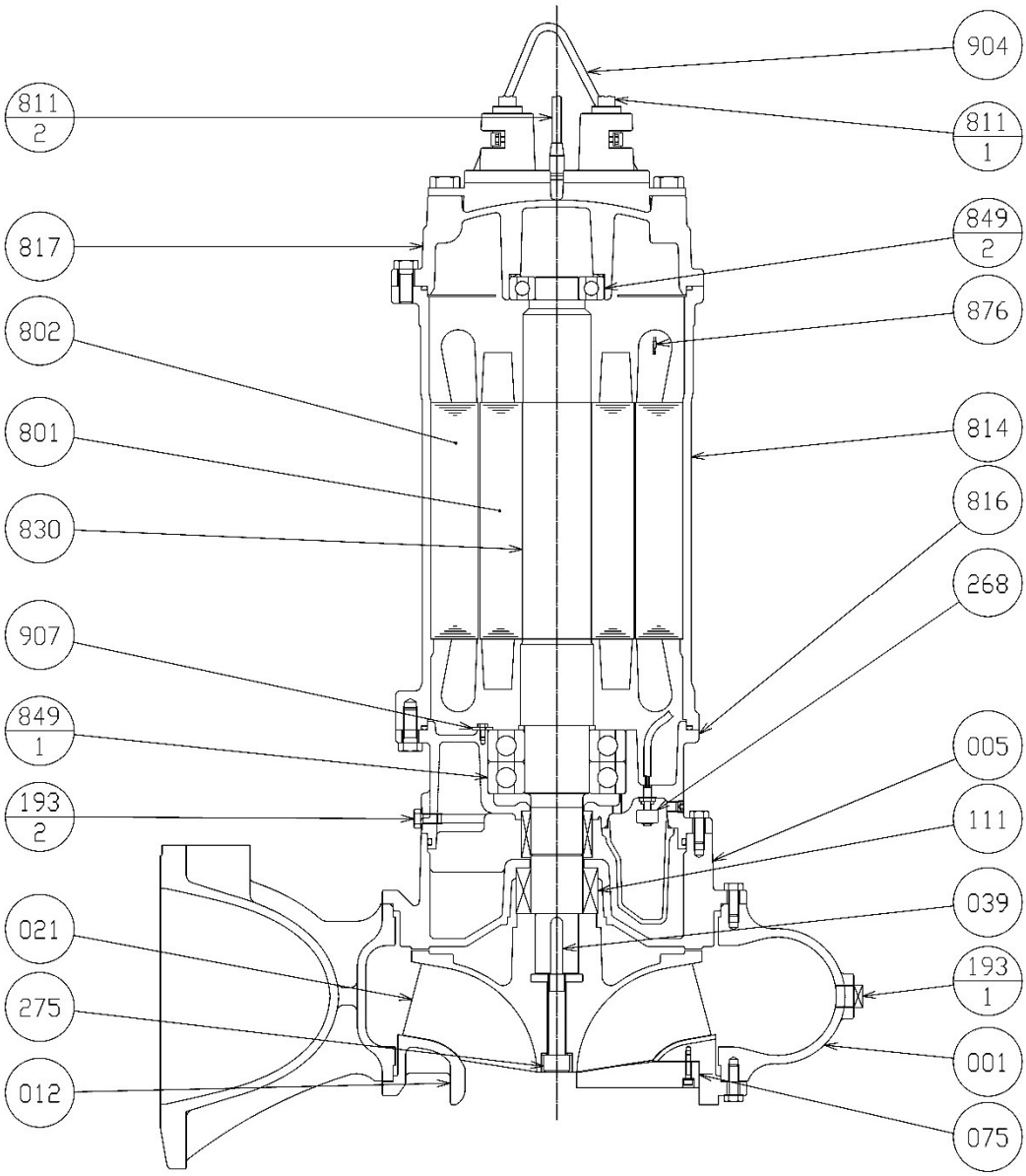

Item Number	Part Name	Material		Qty per unit
001	Pump Casing	FC250	Cast iron	1
005	Intermediate Casing	FC250	Cast iron	1
012	Suction Cover	FC250	Cast iron	1
021	Impeller	FCD400	Ductile Cast Iron	1
039	Key	SUS420	Stainless Steel	1
075	Guide Pin	FCD400	Ductile Cast Iron	1
111	Mechanical Seal			1
193-1	Plug	SUS304		2
193-2	Oil Plug	NBR / SUS304		2 set
268	Leakage Detector			1
275	Impeller Bolt	SUS304	Stainless Steel	1
801	Rotor			1

Item Number	Part Name	Material		Qty per unit
802	Stator			1
811-1	Submersible Cable (Power)			2
811-2	Submersible Cable (Signal)			1
814	Motor Frame	FC200	Cast iron	1
816	Power Side Braket	FC200	Cast iron	1
817	Opposite Side Braket	FC200	Cast iron	1
830	Shaft	SUS403	Stainless Steel	1
849-1	Ball Bearing			1
849-2	Ball Bearing			1
876	Thermal Protector			2
904	Lifting Hanger	SS	Steel	1
907	Bearing Cover	SPCC	Steel	1

Sectional View with QDC 50 Hz

- **Applicable Models – DKE with QDC LM65DI, LM80DI**

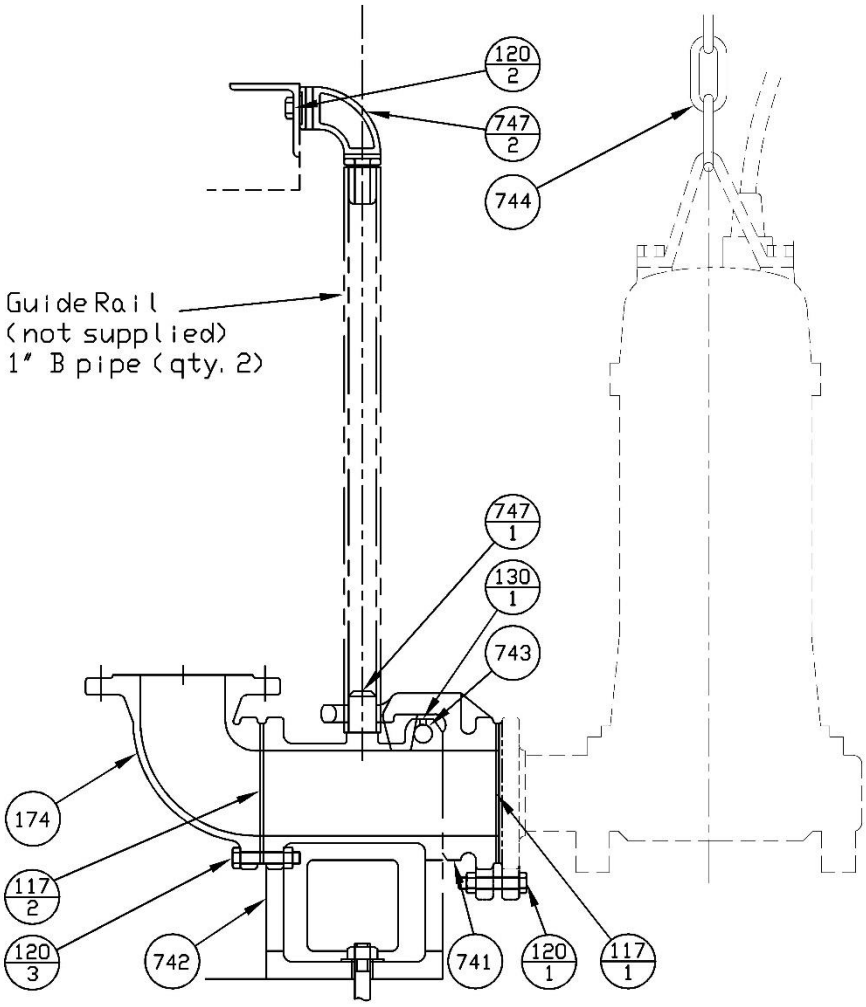

Item Number	Part Name	Material		Qty per unit
117-1	Gasket	#5611		1
117-2	Gasket	#5611		1
120-1	Nut & Bolt	SUS304	Stainless Steel	4
120-2	Nut & Bolt	SUS304	Stainless Steel	2
120-3	Nut & Bolt	SUS304	Stainless Steel	4
130-1	Set Screw	SUS304	Stainless Steel	1
174	Discharge Bend	FC200	Cast iron	1

Item Number	Part Name	Material		Qty per unit
741	Sliding Guide	FC200	Cast iron	1
742	QDC Body	FC200	Cast iron	1
743	Suspension Bar	SUS420J1	Stainless Steel	1
744	Chain	SS	Steel	1
747-1	Guide Pin	SUS304	Stainless Steel	2
747-2	Guide Support	SUS304	Stainless Steel	1

Sectional View with QDC 50 Hz

- **Applicable Models – DKE with QDC LL80DI**

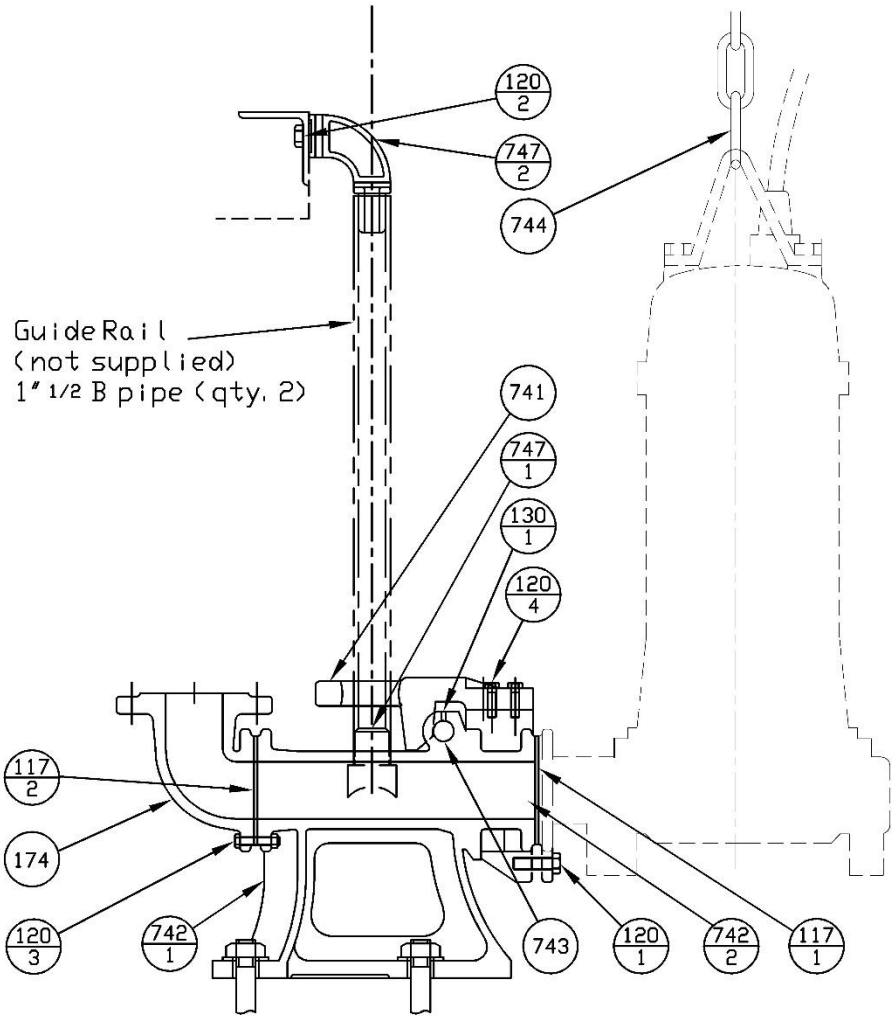

Item Number	Part Name	Material		Qty per unit
117-1	Gasket	#5611		1
117-2	Gasket	#5611		1
120-1	Bolt	SUS304	Stainless Steel	8
120-2	Nut & Bolt	SUS304	Stainless Steel	2
120-3	Nut & Bolt	SUS304	Stainless Steel	4
120-4	Bolt	SUS304	Stainless Steel	4
130-1	Set Screw	SUS304	Stainless Steel	1
174	Discharge Bend	FC200	Cast iron	1

Item Number	Part Name	Material		Qty per unit
741	Sliding Guide	FCD400	Ductile Cast Iron	1
742-1	QDC Body	FC200	Cast iron	1
742-2	QDC Flange	FC250	Cast iron	1
743	Suspension Bar	SUS420J1	Stainless Steel	1
744	Chain	SS	Steel	1
747-1	Guide Pin	SUS304	Stainless Steel	2
747-2	Guide Support	SUS304	Stainless Steel	1

EBARA Submersible Sewage Pumps — Model DKE

Sectional View with QDC — 50 Hz

- **Applicable Models – DKE with QDC LL100F**

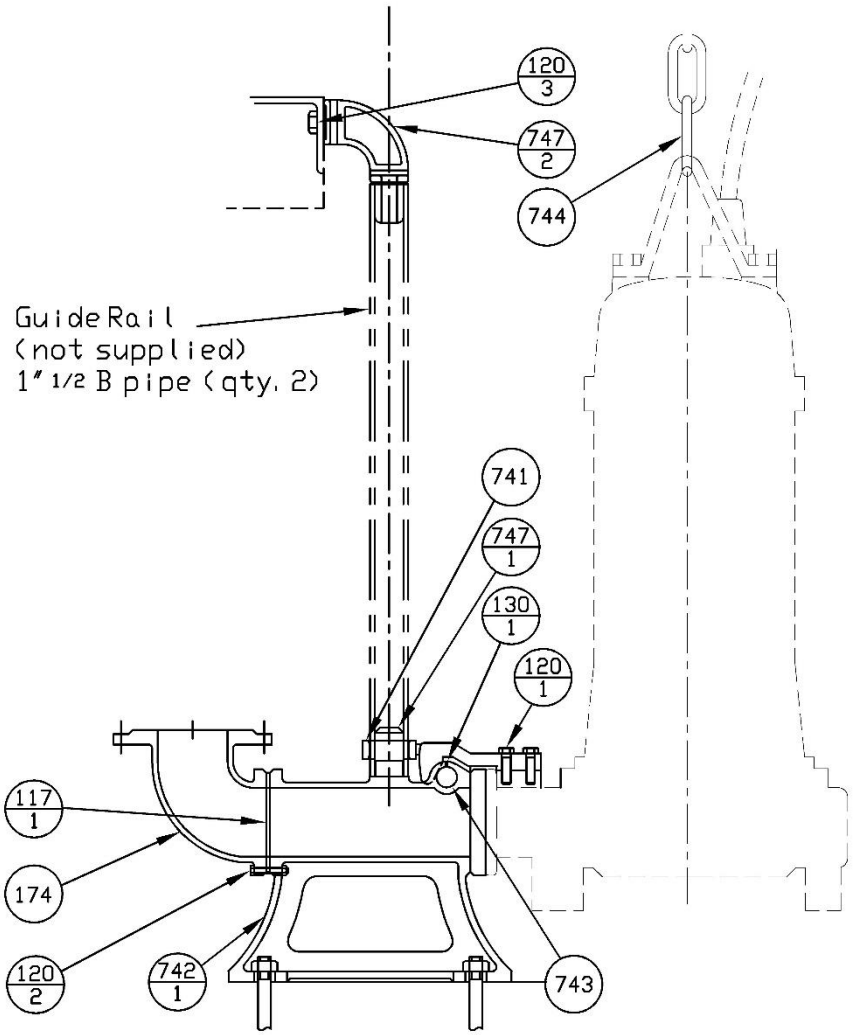

Item Number	Part Name	Material		Qty per unit
117-1	Gasket	#5611		1
120-1	Bolt	SUS304	Stainless Steel	4
120-2	Nut & Bolt	SUS304	Stainless Steel	4
120-3	Nut & Bolt	SUS304	Stainless Steel	2
130-1	Set Screw	SUS304	Stainless Steel	1
130-1	Set Screw	SUS304	Stainless Steel	1
174	Discharge Bend	FC200	Cast iron	1

Item Number	Part Name	Material		Qty per unit
741	Sliding Guide	FCD400	Ductile Cast Iron	1
742	QDC Body	FC200	Cast iron	1
743	Suspension Bar	SUS420J1	Stainless Steel	1
744	Chain	SS	Steel	1
747-1	Guide Pin	SUS304	Stainless Steel	2
747-2	Guide Support	SUS304	Stainless Steel	1

EBARA Submersible Sewage Pumps — Model DKE

Sectional View with QDC — 50 Hz

- **Applicable Models – DKE with QDC LL150, LL150F, LL150YF**

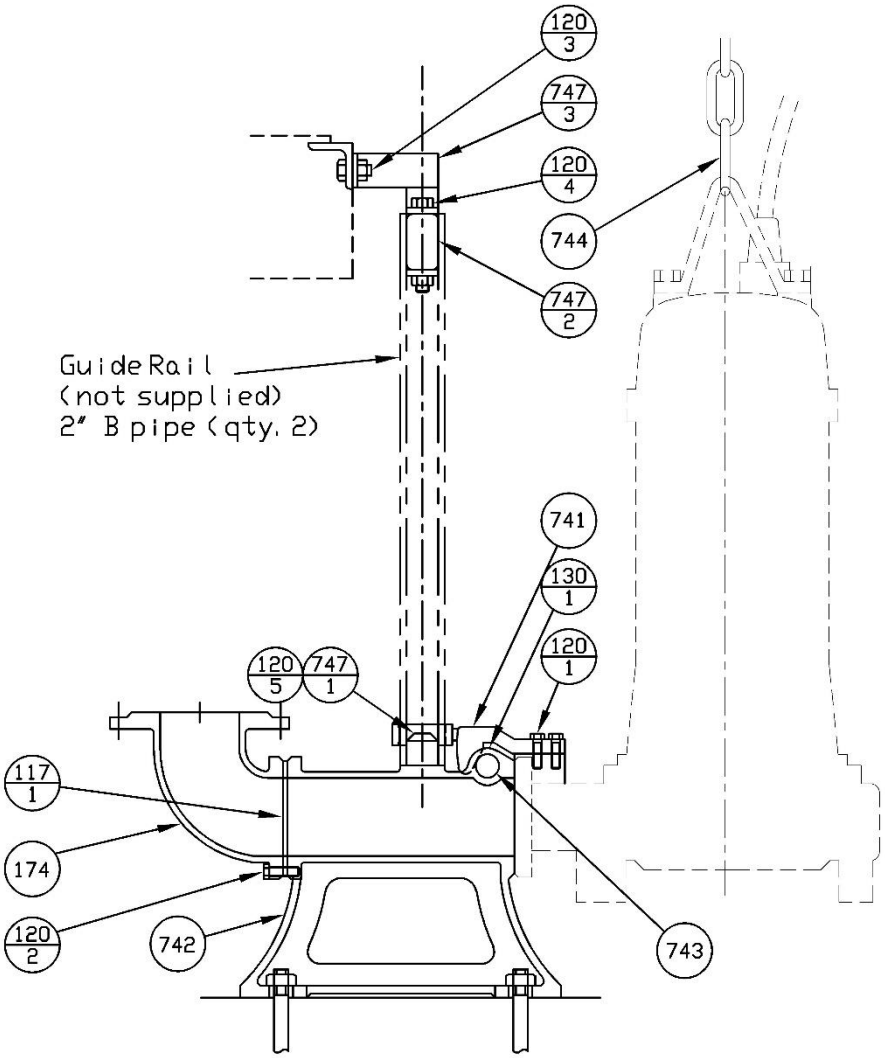

Item Number	Part Name	Material		Qty per unit
117-1	Gasket	#5611		1
120-1	Bolt	SUS304	Stainless Steel	4
120-2	Bolt	SUS304	Stainless Steel	4
120-3	Nut & Bolt	SUS304	Stainless Steel	2
120-4	Nut & Bolt	SUS304	Stainless Steel	2
120-5	Bolt	SUS304	Stainless Steel	2
130-1	Set Screw	SUS304	Stainless Steel	1
174	Discharge Bend	FC200	Cast iron	1

Item Number	Part Name	Material		Qty per unit
741	Sliding Guide	FCD400	Ductile Cast Iron	1
742	QDC Body	FC200	Cast iron	1
743	Suspension Bar	SUS420J1	Stainless Steel	1
744	Chain	SS	Steel	1
747-1	Guide Pin	SUS304	Stainless Steel	2
747-2	Rubber Ring	NR	Rubber	2
747-3	Guide Support	SUS304	Stainless Steel	1

EBARA Submersible Sewage Pumps — Model DKE

Sectional View with QDC — 50 Hz

- **Applicable Models – DKE with QDC LL250F, LL250YF, LL300, LL300F**

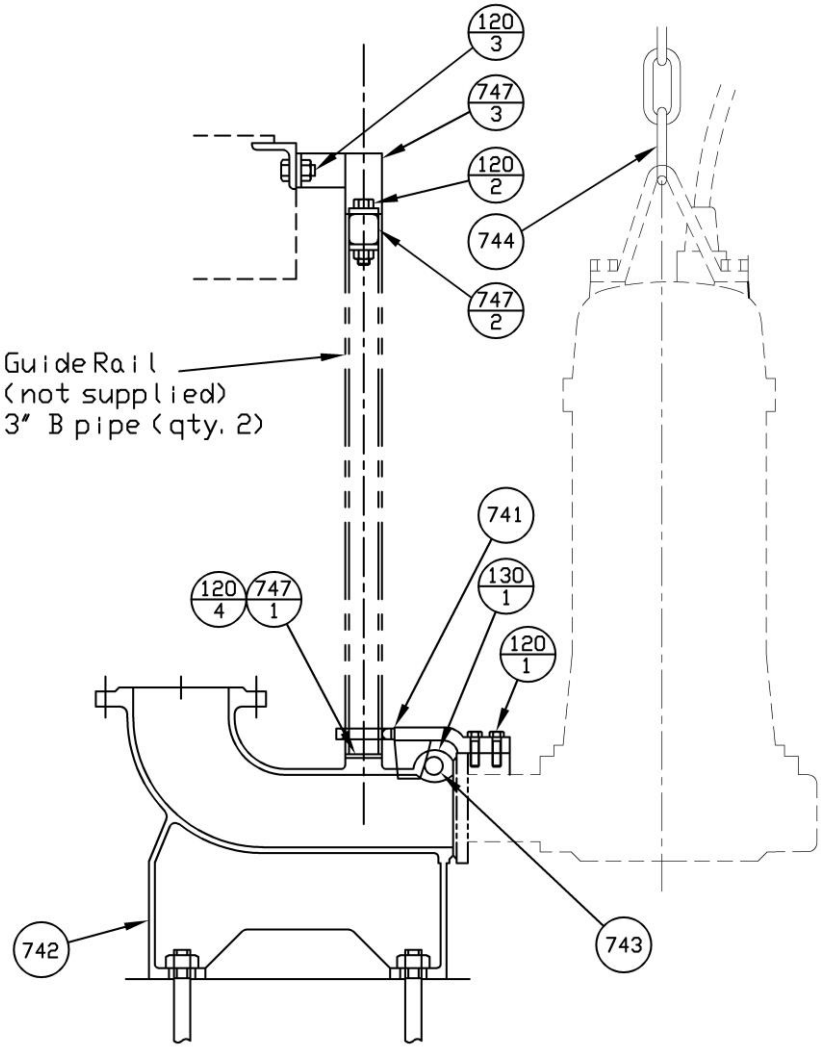

Item Number	Part Name	Material		Qty per unit
120-1	Bolt	SUS304	Stainless Steel	4
120-2	Nut & Bolt	SUS304	Stainless Steel	2
120-3	Nut & Bolt	SUS304	Stainless Steel	2
120-4	Nut & Bolt	SUS304	Stainless Steel	2
130-1	Set Screw	SUS304	Stainless Steel	1
741	Sliding Guide	FCD400	Ductile Cast Iron	1

Item Number	Part Name	Material		Qty per unit
742	QDC Body	FC200	Cast iron	1
743	Suspension Bar	SUS420J1	Stainless Steel	1
744	Chain	SS	Steel	1
747-1	Pipe Suppport	SUS304	Stainless Steel	1
747-2	Rubber Ring	NR	Rubber	2
747-3	Guide Support	SS	Steel	1

Ebara Submersible Sewage Pump

Model DKE

Performance Curve

4 Poles

50Hz

65DKE51.5_IE3	According to ISO testing code 9906 Grade 3B
50 Hz (Synchronous Speed 1500 min^{-1})	Density=1kg/dm3 Viscosity=1mm2/s

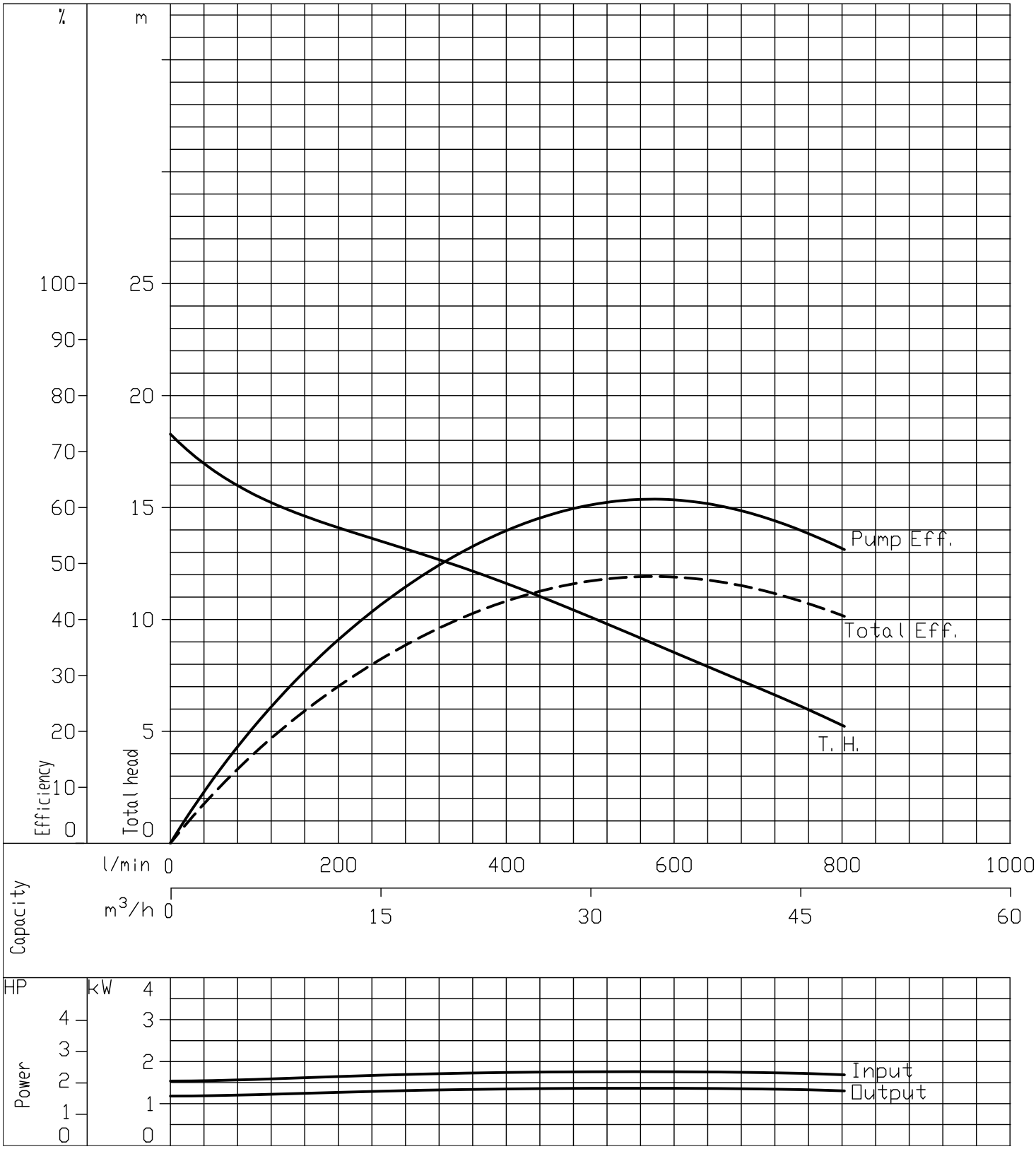

EBARA

DWG. No.	F8-2433461-00

Ebara Submersible Sewage Pump

Model DKE

Performance Curve
4 Poles

50Hz

80DKE51.5_IE3	According to ISO testing code 9906 Grade 3B
50 Hz (Synchronous Speed 1500 min^{-1})	Density=1kg/dm^3 Viscosity=1mm^2/s

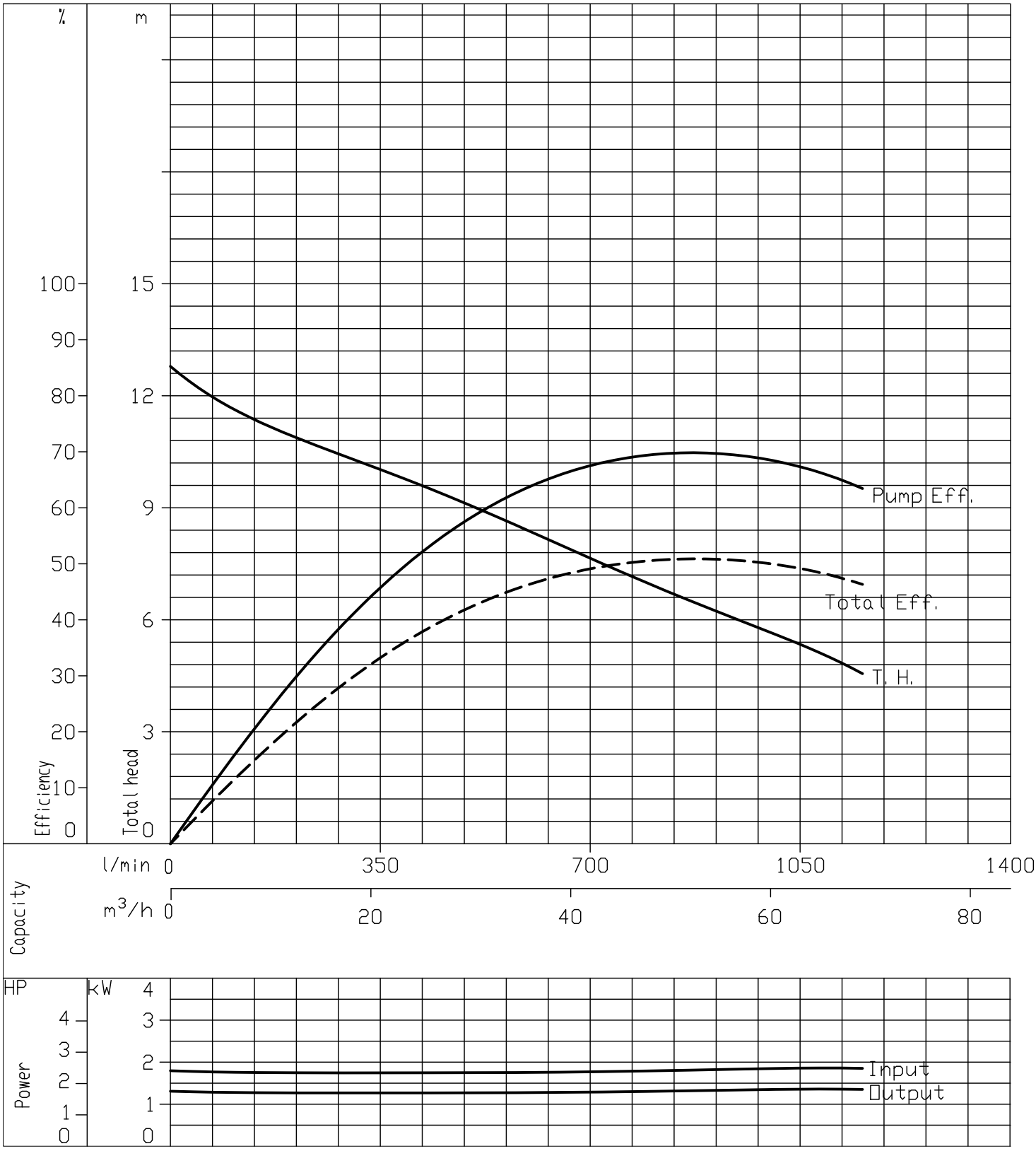

EBARA

DWG. No.	F8-2433017-00

Ebara Submersible Sewage Pump

Model DKE

Performance Curve
4 Poles

50Hz

80DKE52.2_IE3	According to ISO testing code 9906 Grade 3B
50 Hz (Synchronous Speed 1500 min^{-1})	Density=1kg/dm3 Viscosity=1mm2/s

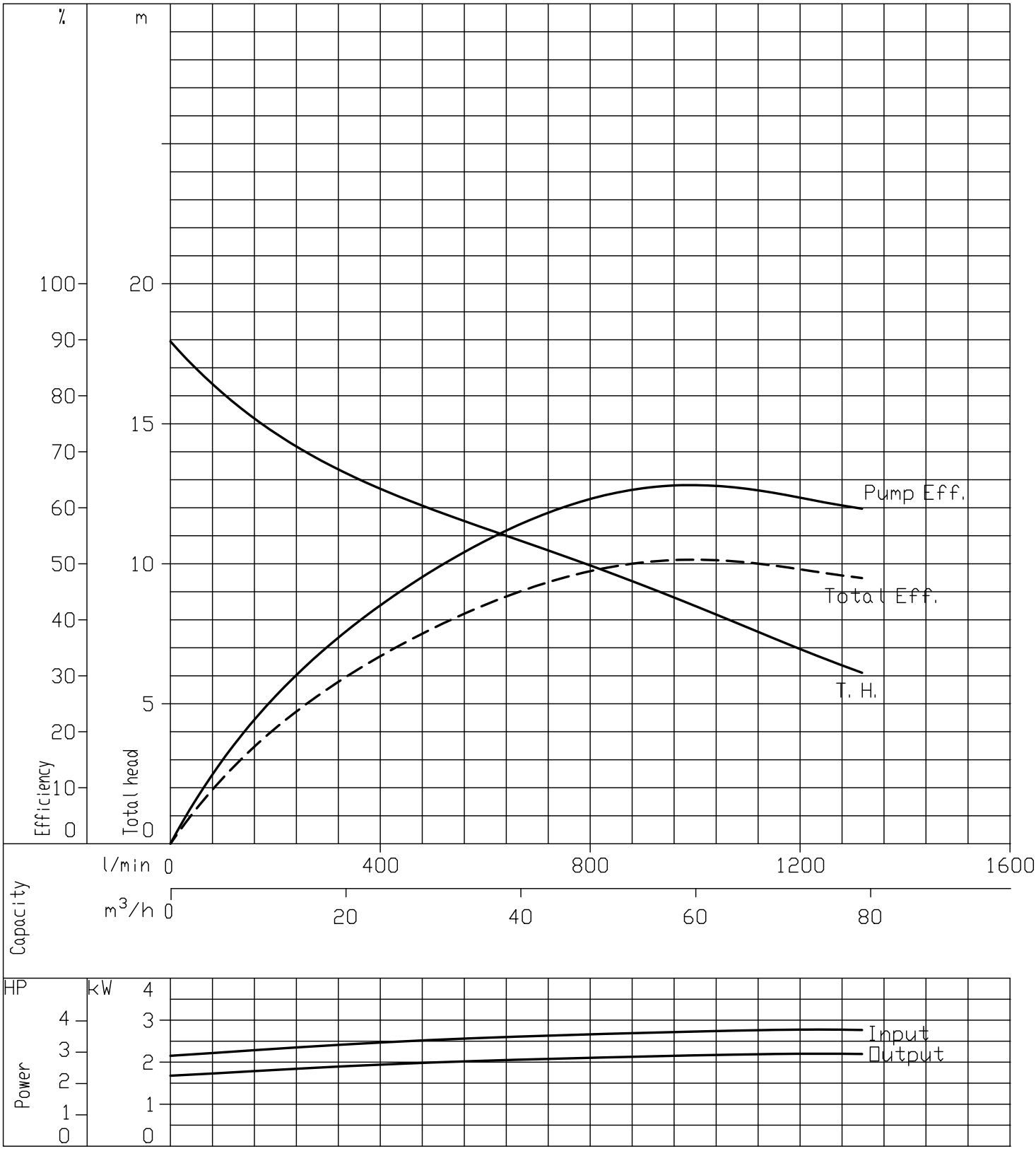

EBARA

DWG. No.	F8-2433019-00

Ebara Submersible Sewage Pump

Model DKE

Performance Curve
4 Poles

50Hz

80DKE53.7_IE3	According to ISO testing code 9906 Grade 3B
50 Hz (Synchronous Speed 1500 min^{-1})	Density=1kg/dm3 Viscosity=1mm2/s

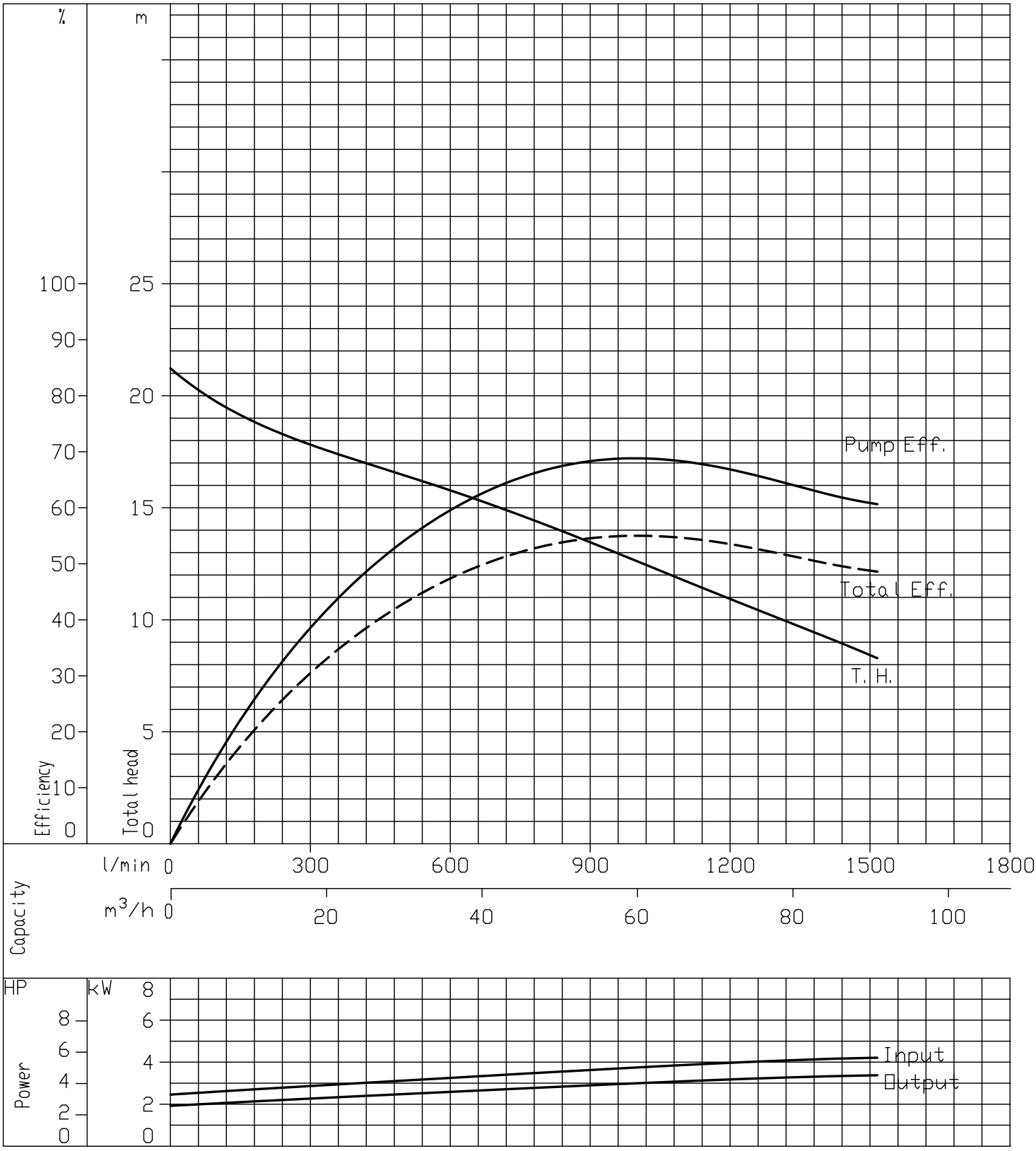

EBARA

DWG. No.	F8-2433021-00

Ebara Submersible Sewage Pump

Model DKE

Performance Curve
4 Poles

50Hz

100DKE53.7_IE3	According to ISO testing code 9906 Grade 3B
50 Hz (Synchronous Speed 1500 min^{-1})	Density=1kg/dm3 Viscosity=1mm2/s

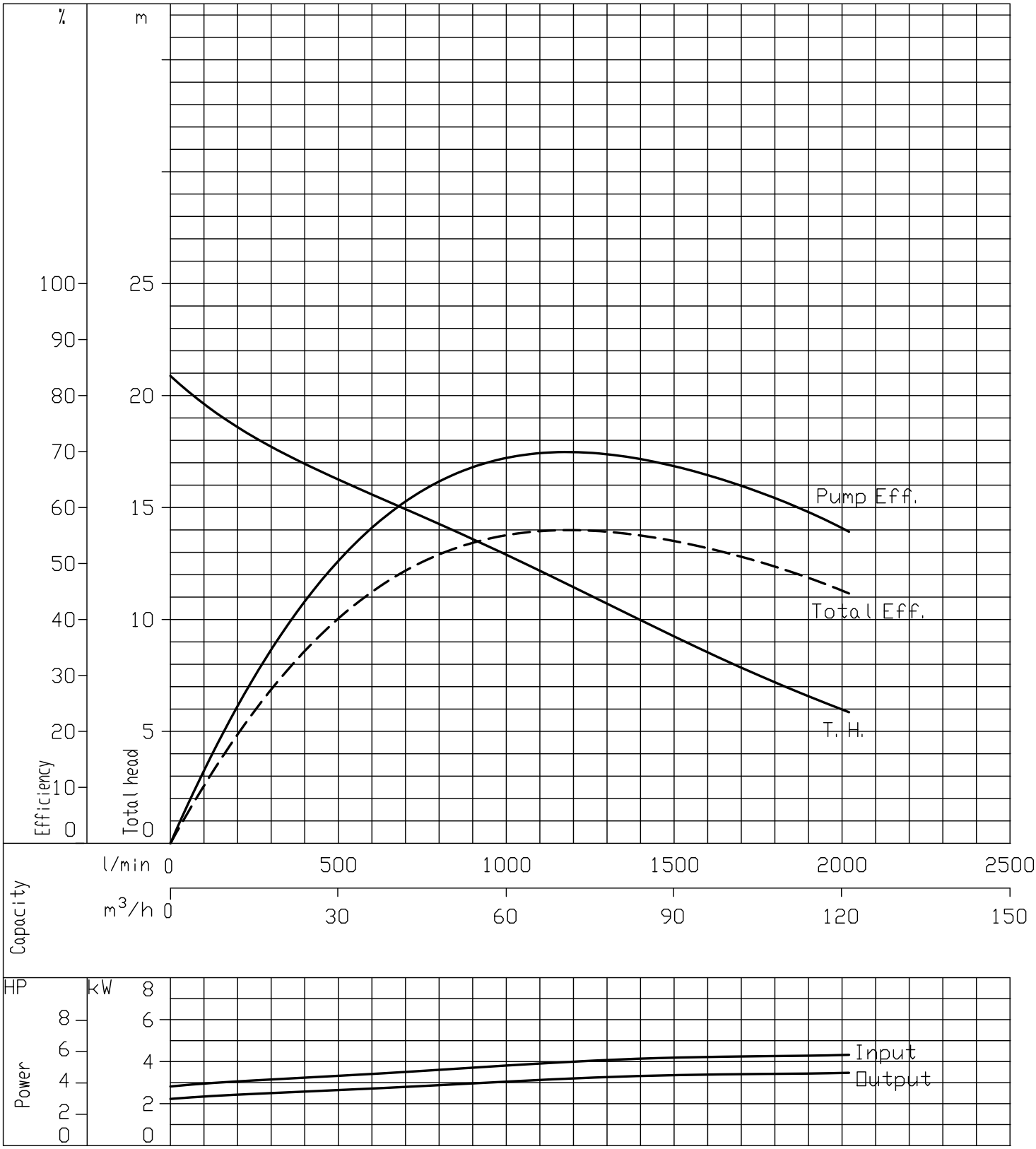

EBARA

DWG. No.	F8-2433023-00

Ebara Submersible Sewage Pump

Model DKE

Performance Curve
4 Poles

50Hz

80DKE55.5_IE3	According to ISO testing code 9906 Grade 3B
50 Hz (Synchronous Speed 1500 min^{-1})	Density=1kg/dm3 Viscosity=1mm2/s

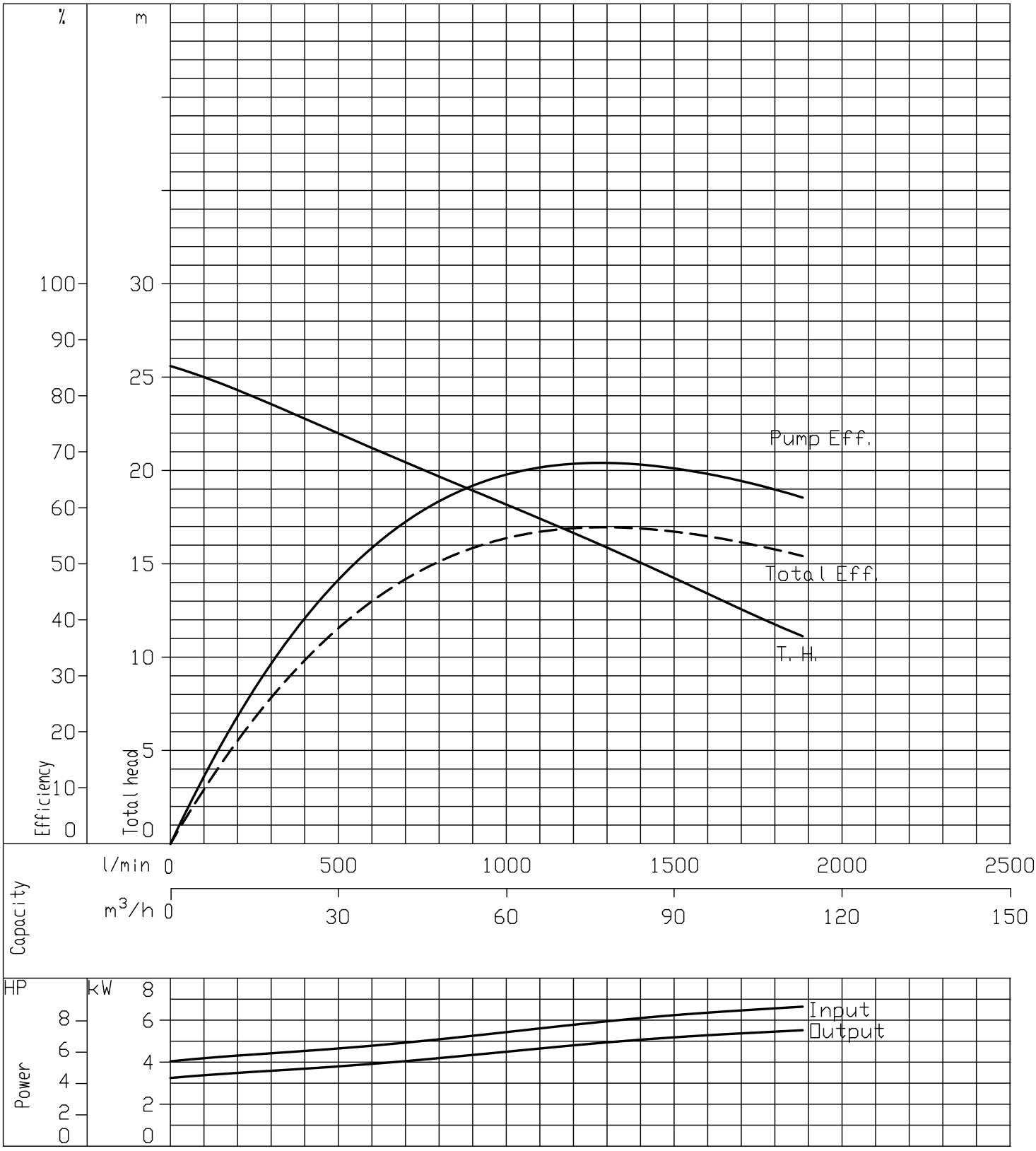

EBARA

DWG. No.	F8-2433025-00

Ebara Submersible Sewage Pump

Model DKE

Performance Curve
4 Poles

50Hz

100DKEB55.5_IE3	According to ISO testing code 9906 Grade 3B
50 Hz (Synchronous Speed 1500 min^{-1})	Density=1kg/dm3 Viscosity=1mm2/s

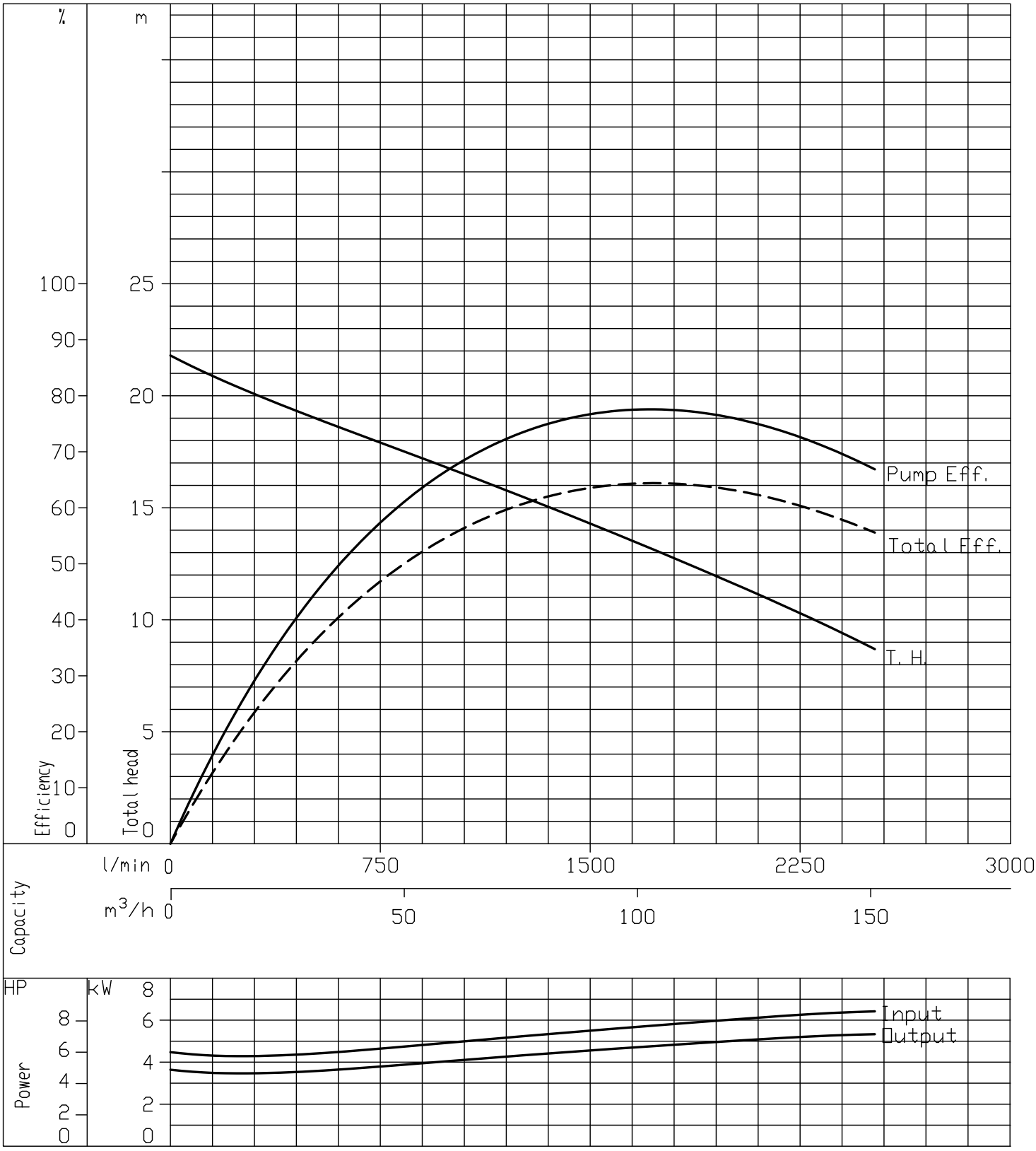

EBARA

DWG. No.	F8-2433027-00

Ebara Submersible Sewage Pump

Model DKE

Performance Curve
4 Poles

50Hz

100DKE55.5_IE3	According to ISO testing code 9906 Grade 3B
50 Hz (Synchronous Speed 1500 min^{-1})	Density=1kg/dm3 Viscosity=1mm2/s

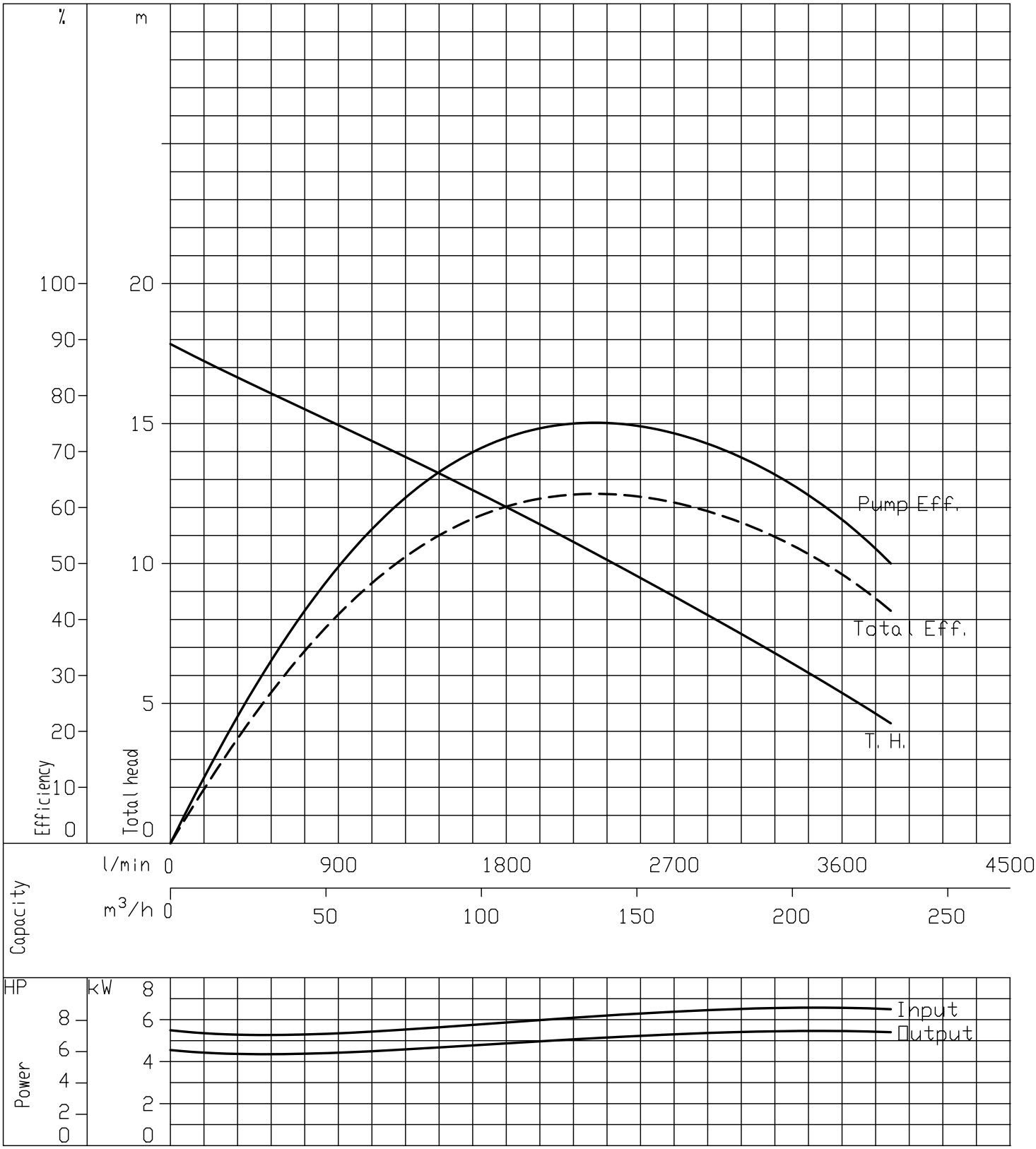

EBARA

DWG. No.	F8-2433029-00

Ebara Submersible Sewage Pump

Model DKE

Performance Curve

4 Poles

50Hz

150DKE55.5_IE3	According to ISO testing code 9906 Grade 3B
50 Hz (Synchronous Speed 1500 min^{-1})	Density=1kg/dm3 Viscosity=1mm2/s

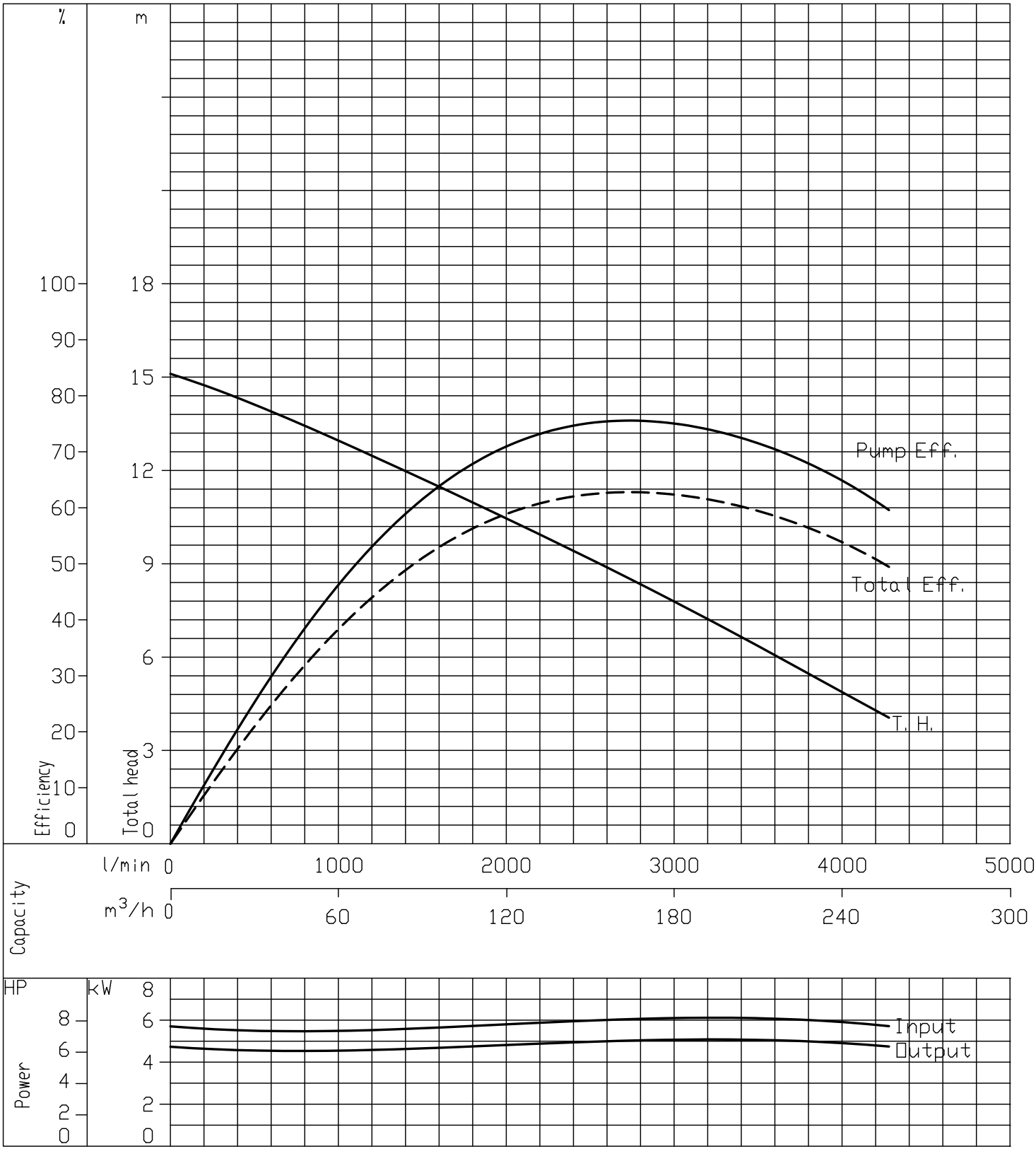

EBARA

DWG. No.	F8-2433031-00

Ebara Submersible Sewage Pump

Model DKE

Performance Curve
4 Poles

50Hz

80DKE57.5_IE3	According to ISO testing code 9906 Grade 3B
50 Hz (Synchronous Speed 1500 min^{-1})	Density=1kg/dm3 Viscosity=1mm2/s

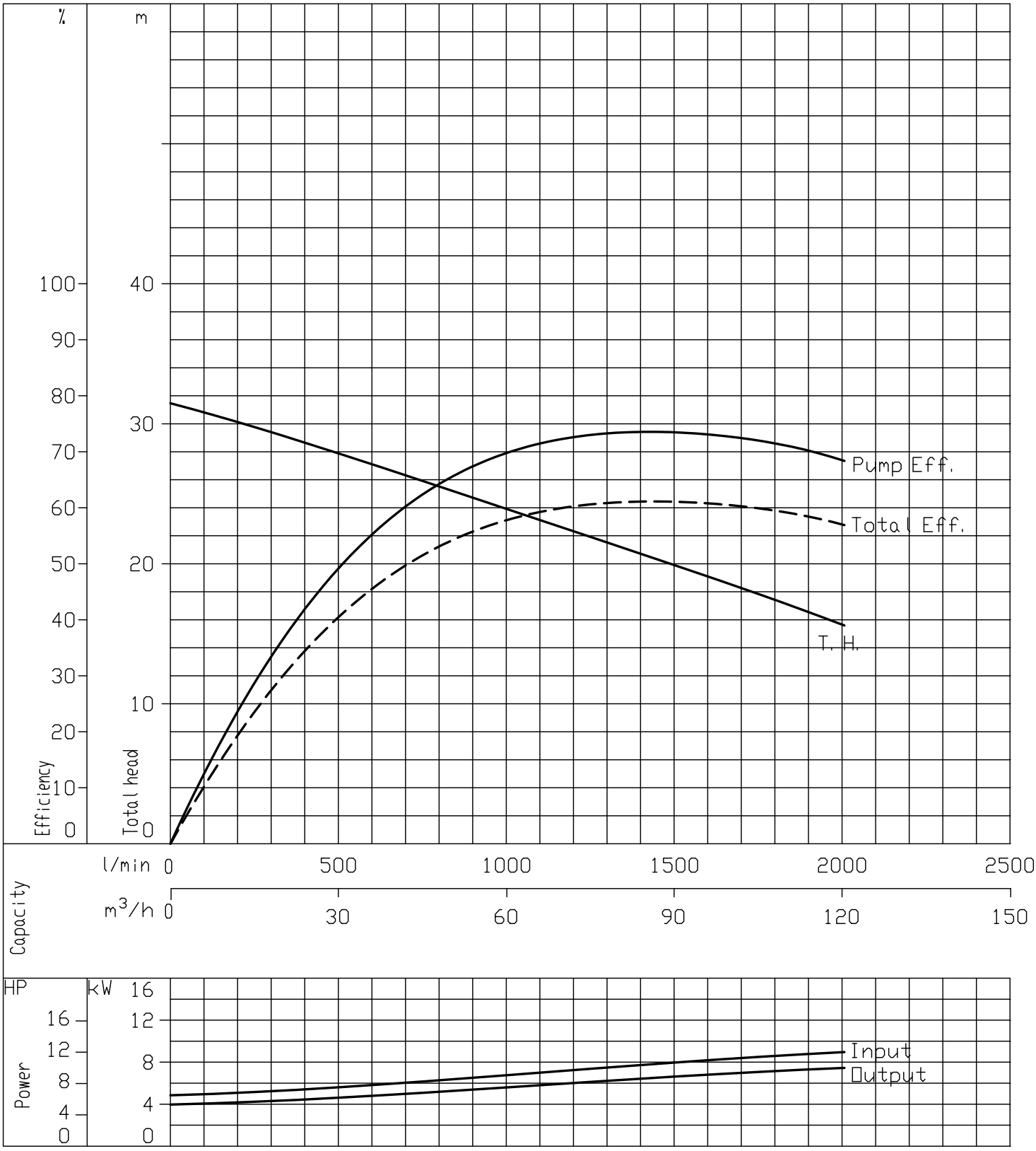

EBARA

DWG. No.	F8-2433033-00

Ebara Submersible Sewage Pump

Model DKE

Performance Curve
4 Poles

50Hz

100DKEB57.5_IE3	According to ISO testing code 9906 Grade 3B
50 Hz (Synchronous Speed 1500 min^{-1})	Density=1kg/dm3 Viscosity=1mm2/s

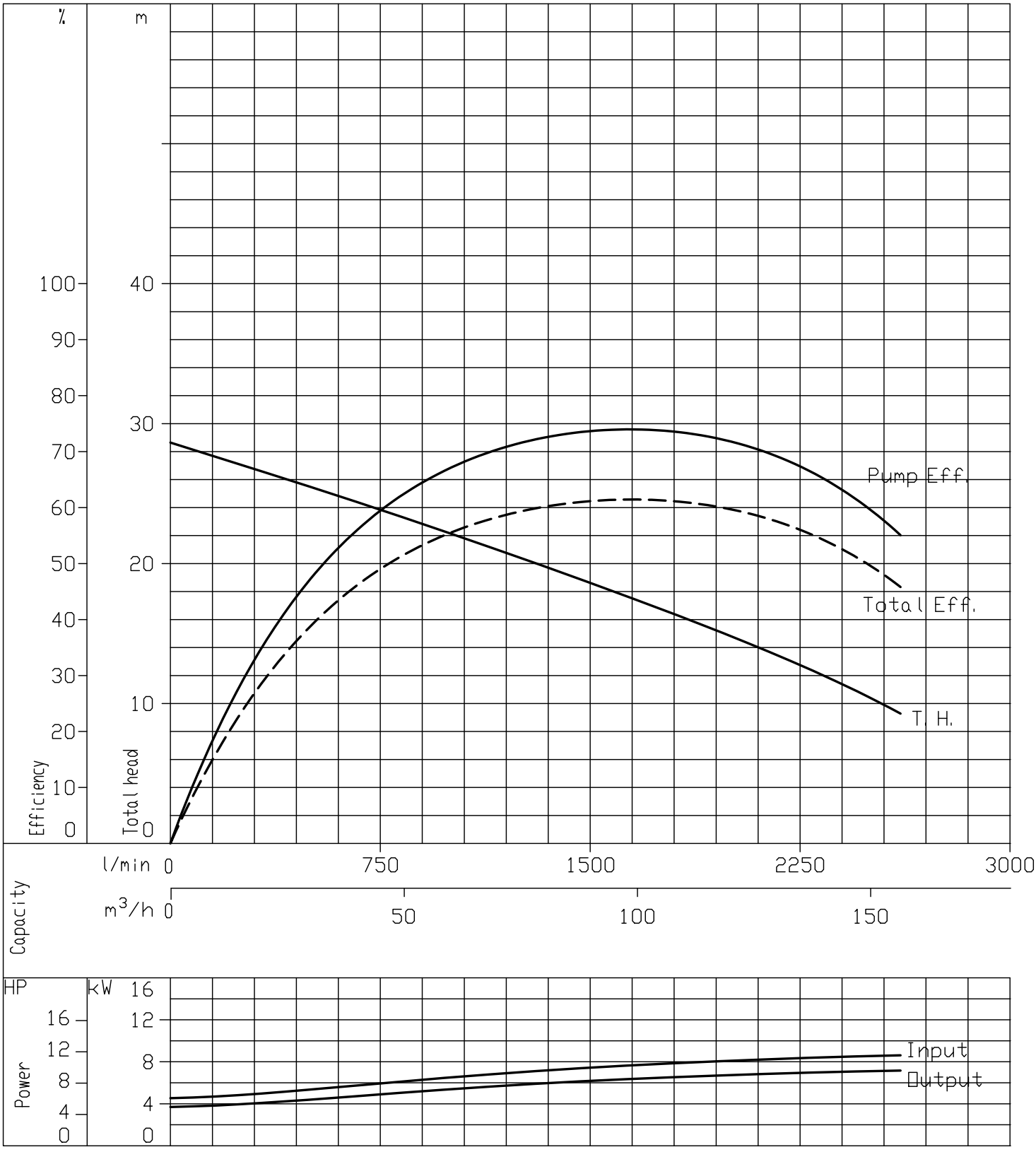

EBARA

DWG. No.	F8-2433035-00

Ebara Submersible Sewage Pump

Model DKE

Performance Curve

4 Poles

50Hz

100DKE57.5_IE3	According to ISO testing code 9906 Grade 3B
50 Hz (Synchronous Speed 1500 min^{-1})	Density=1kg/dm3 Viscosity=1mm2/s

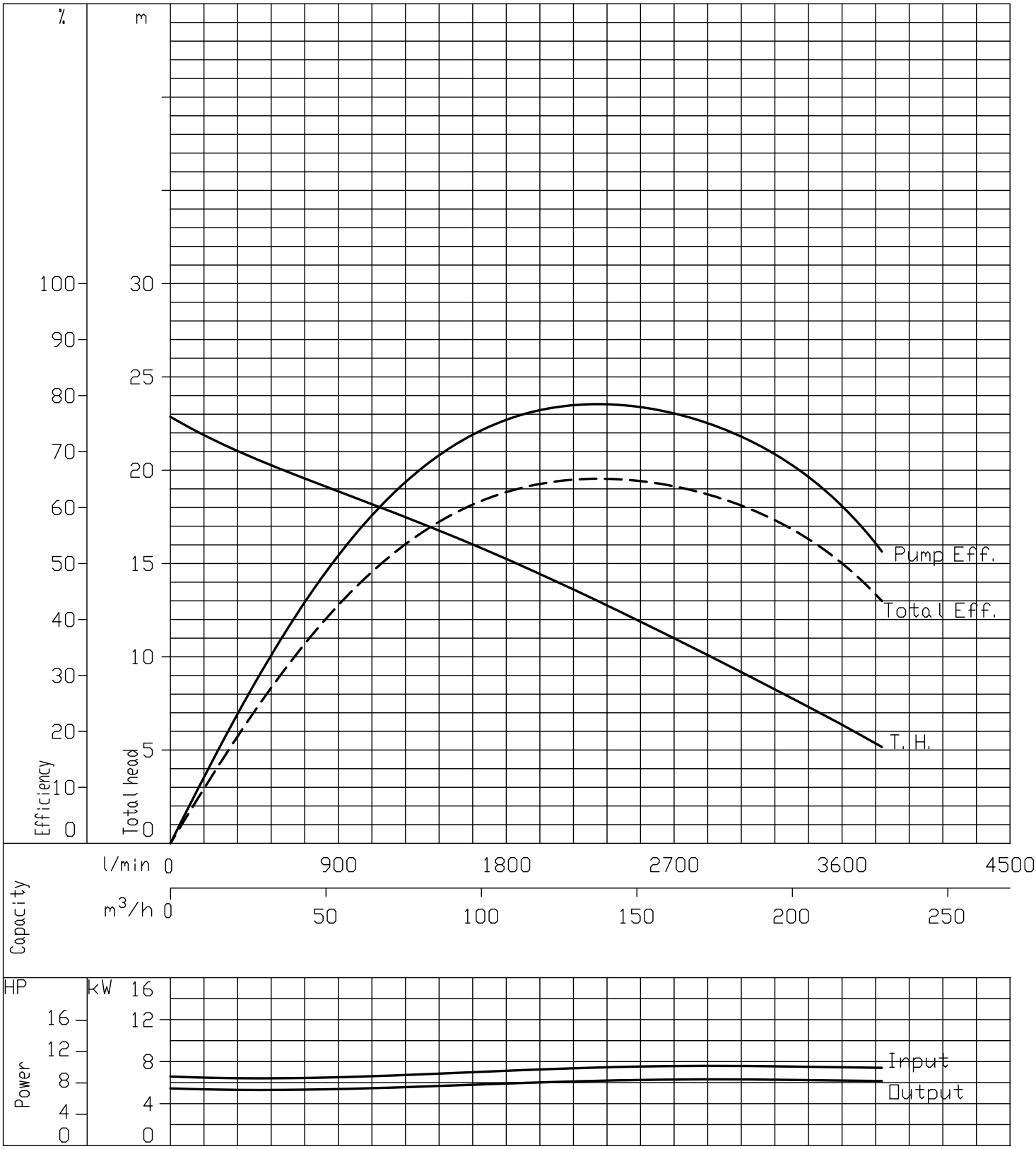

EBARA

DWG. No.	F8-2433037-00

Ebara Submersible Sewage Pump

Model DKE

Performance Curve

4 Poles

50Hz

150DKE57.5_IE3	According to ISO testing code 9906 Grade 3B
50 Hz (Synchronous Speed 1500 min^{-1})	Density=1kg/dm3 Viscosity=1mm2/s

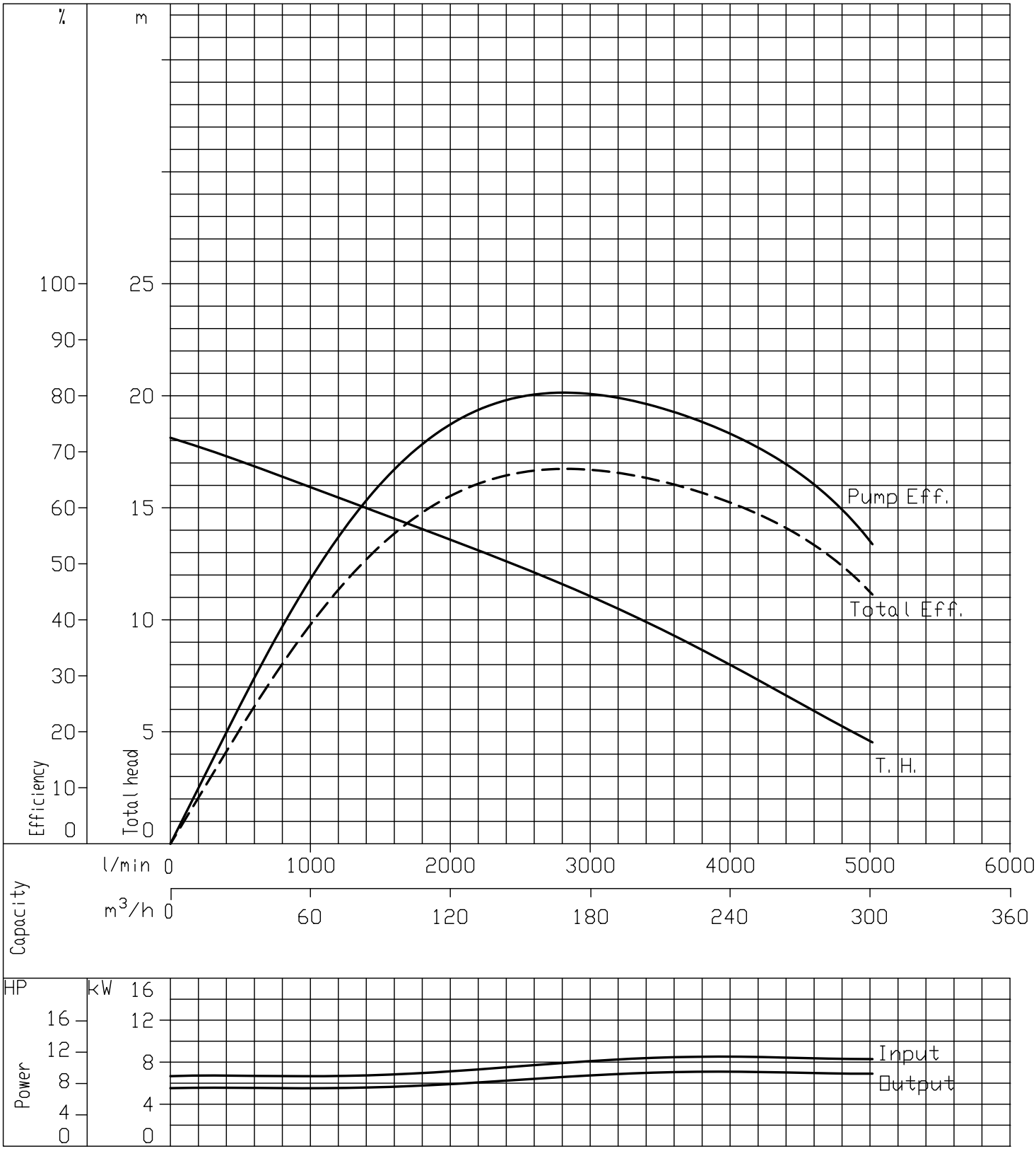

EBARA

DWG. No.	F8-2433039-00

Ebara Submersible Sewage Pump

Model DKE

Performance Curve
4 Poles

50Hz

200DKE57.5_IE3	According to ISO testing code 9906 Grade 3B
50 Hz (Synchronous Speed 1500 min^{-1})	Density=1kg/dm3 Viscosity=1mm2/s

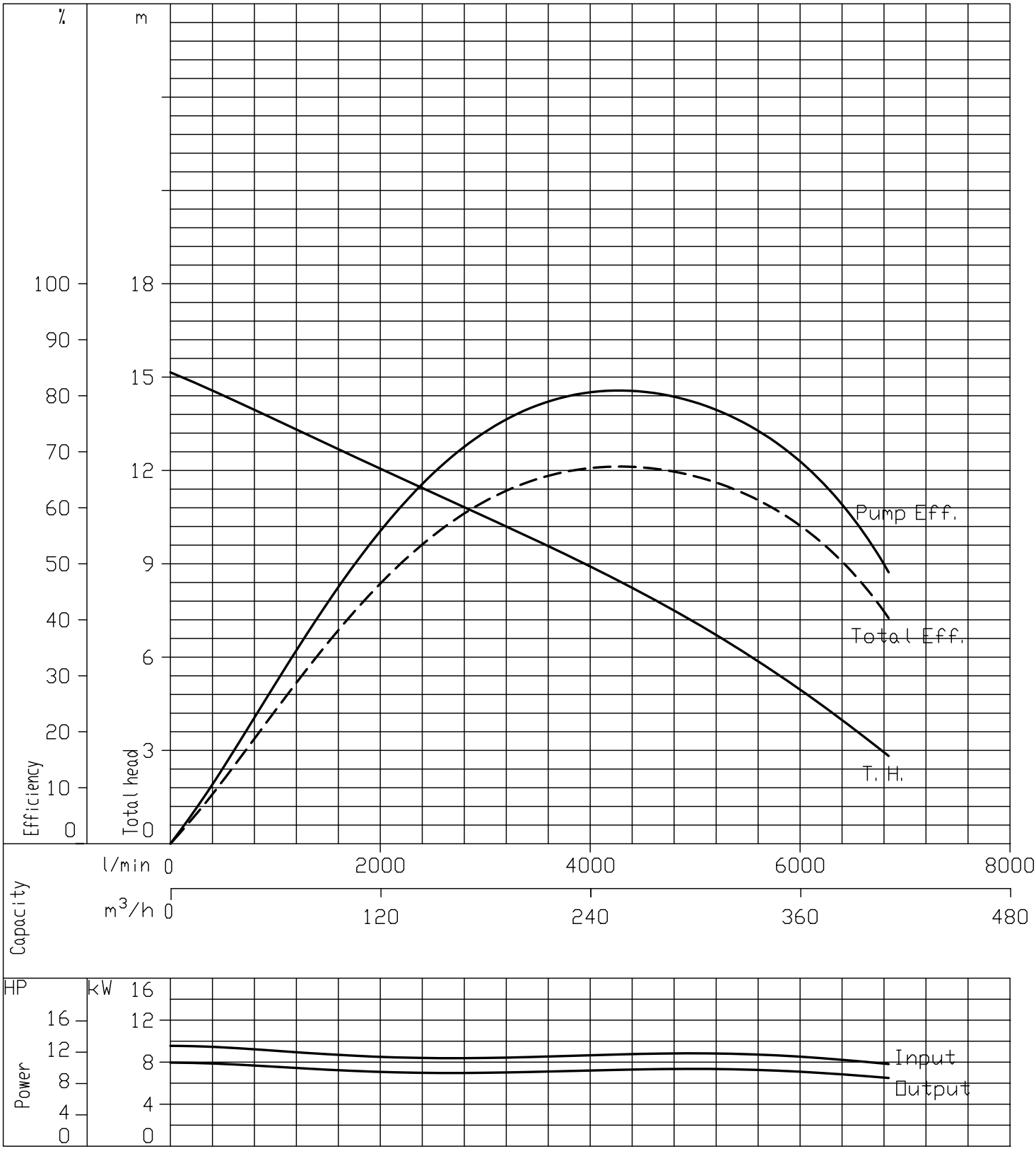

EBARA

DWG. No.	F8-2433041-00

Ebara Submersible Sewage Pump

Model DKE

Performance Curve
4 Poles

50Hz

100DKEB511_IE3	According to ISO testing code 9906 Grade 3B
50 Hz (Synchronous Speed 1500 min^{-1})	Density=1kg/dm3 Viscosity=1mm2/s

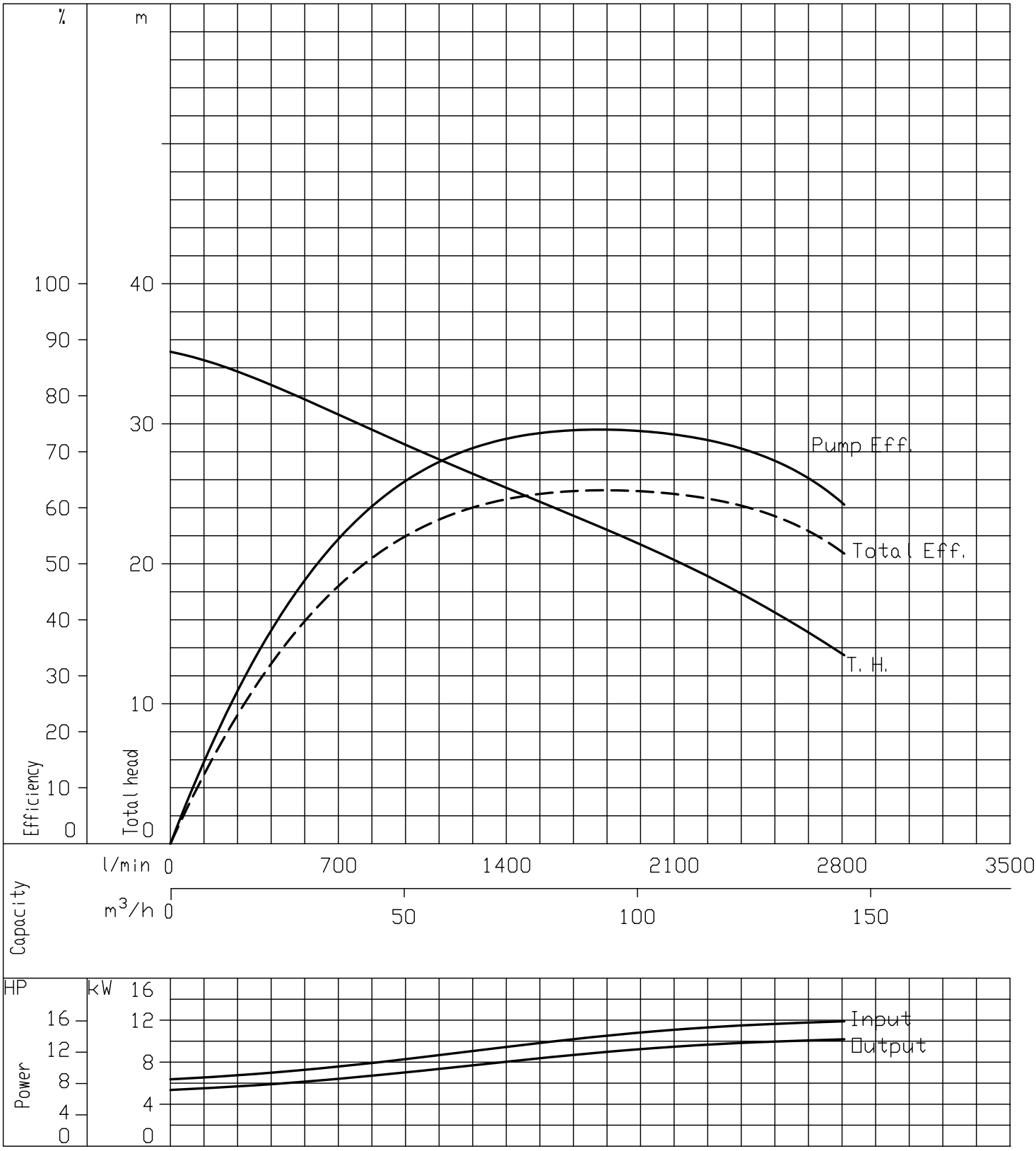

EBARA

DWG. No.	F8-2433043-00

Ebara Submersible Sewage Pump

Model DKE

Performance Curve
4 Poles

50Hz

100DKE511_IE3	According to ISO testing code 9906 Grade 3B
50 Hz (Synchronous Speed 1500 min^{-1})	Density=1kg/dm3 Viscosity=1mm2/s

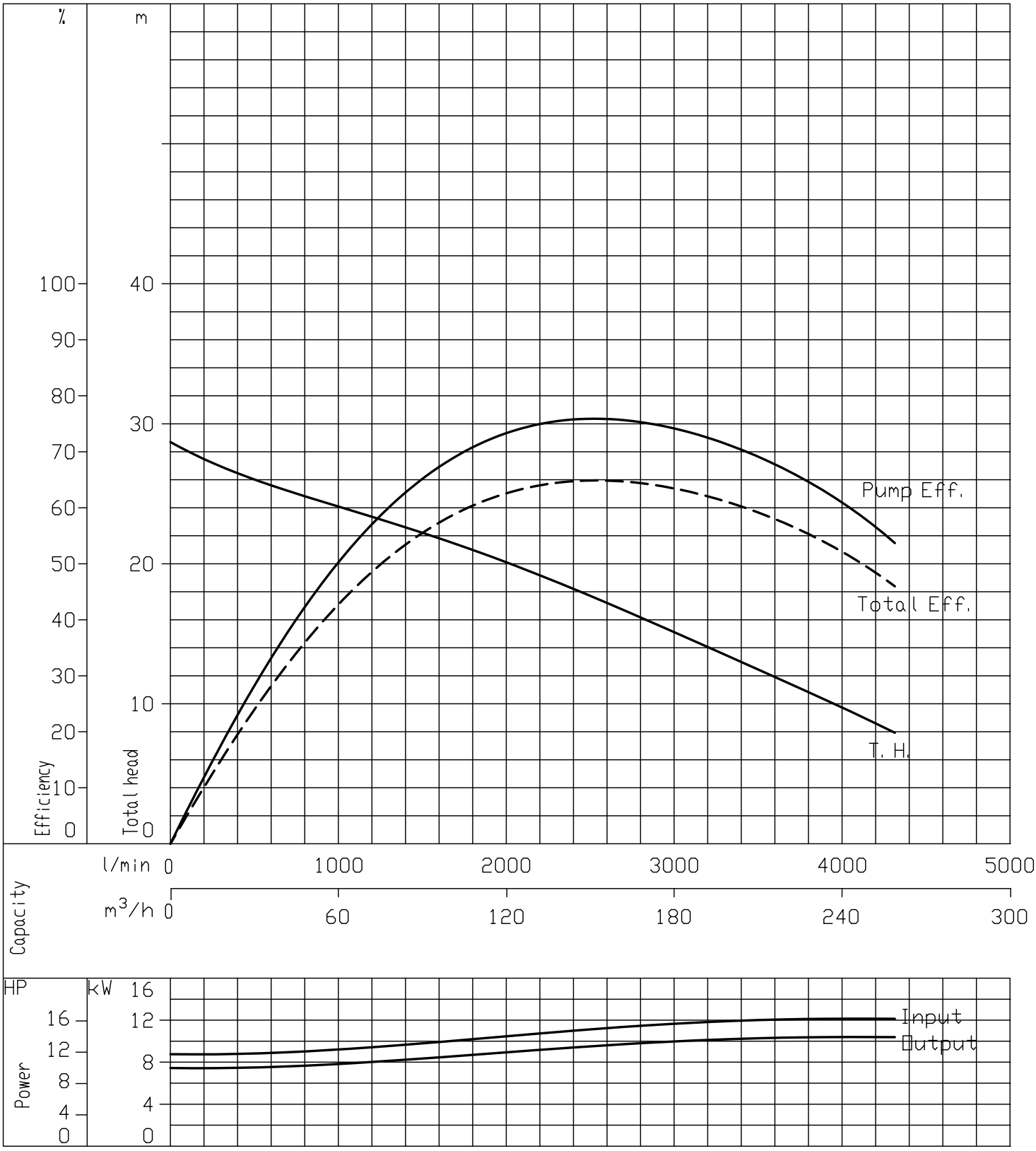

EBARA

DWG. No.	F8-2433045-00

Ebara Submersible Sewage Pump

Model DKE

Performance Curve
4 Poles

50Hz

150DKE511_IE3	According to ISO testing code 9906 Grade 3B
50 Hz (Synchronous Speed 1500 min^{-1})	Density=1kg/dm3 Viscosity=1mm2/s

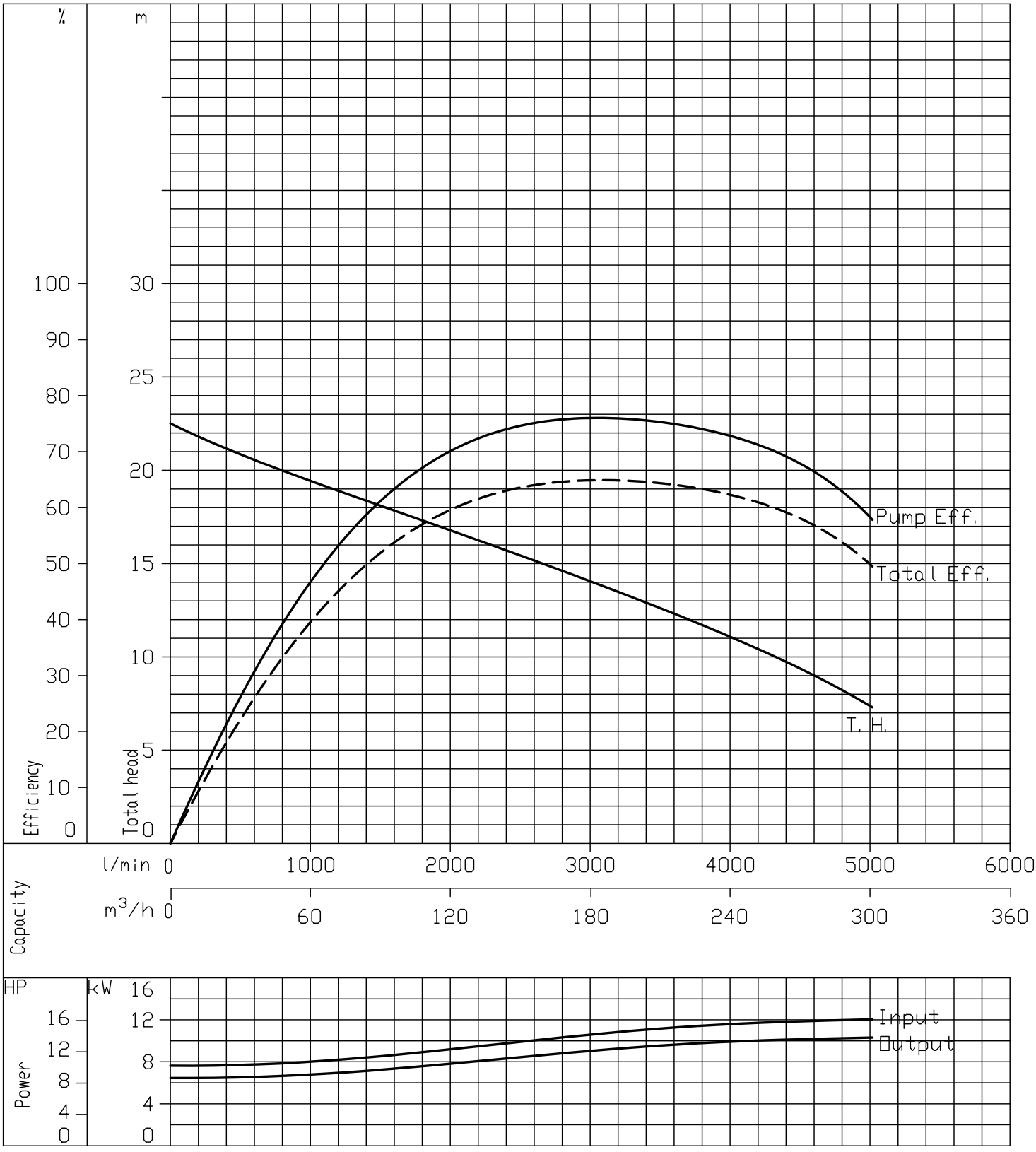

EBARA

DWG. No.	F8-2433047-00

Ebara Submersible Sewage Pump

Model DKE

Performance Curve
4 Poles

50Hz

200DKE511_IE3	According to ISO testing code 9906 Grade 3B
50 Hz (Synchronous Speed 1500 min^{-1})	Density=1kg/dm3 Viscosity=1mm2/s

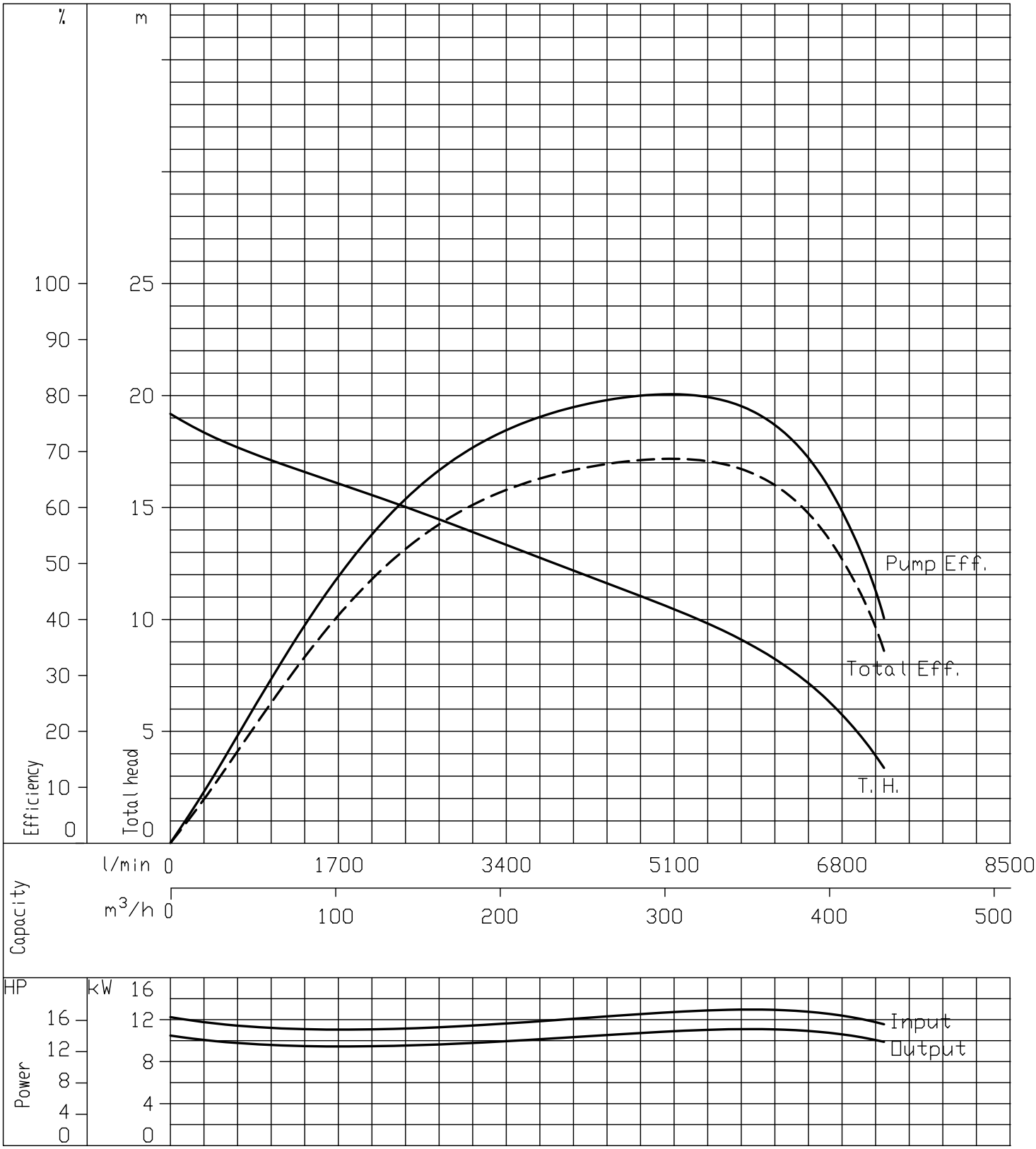

EBARA

DWG. No.	F8-2433049-00

Ebara Submersible Sewage Pump

Model DKE

Performance Curve
4 Poles

50Hz

250DKE511_IE3	According to ISO testing code 9906 Grade 3B
50 Hz (Synchronous Speed 1500 min^{-1})	Density=1kg/dm3 Viscosity=1mm2/s

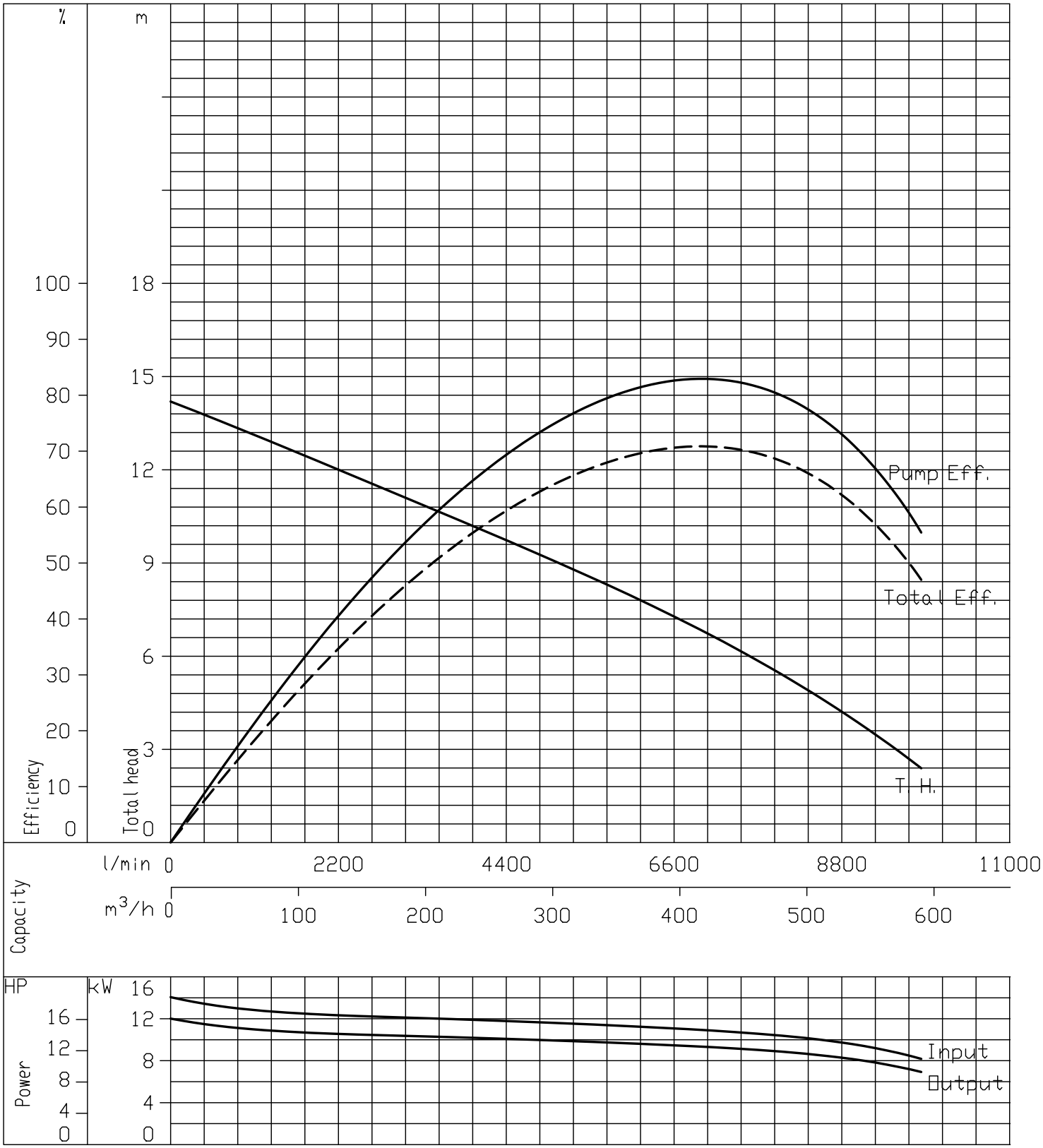

EBARA

DWG. No.	F8-2433051-00

Ebara Submersible Sewage Pump

Model DKE

Performance Curve
4 Poles

50Hz

100DKEB515_IE3	According to ISO testing code 9906 Grade 3B
50 Hz (Synchronous Speed 1500 min^{-1})	Density=1kg/dm3 Viscosity=1mm2/s

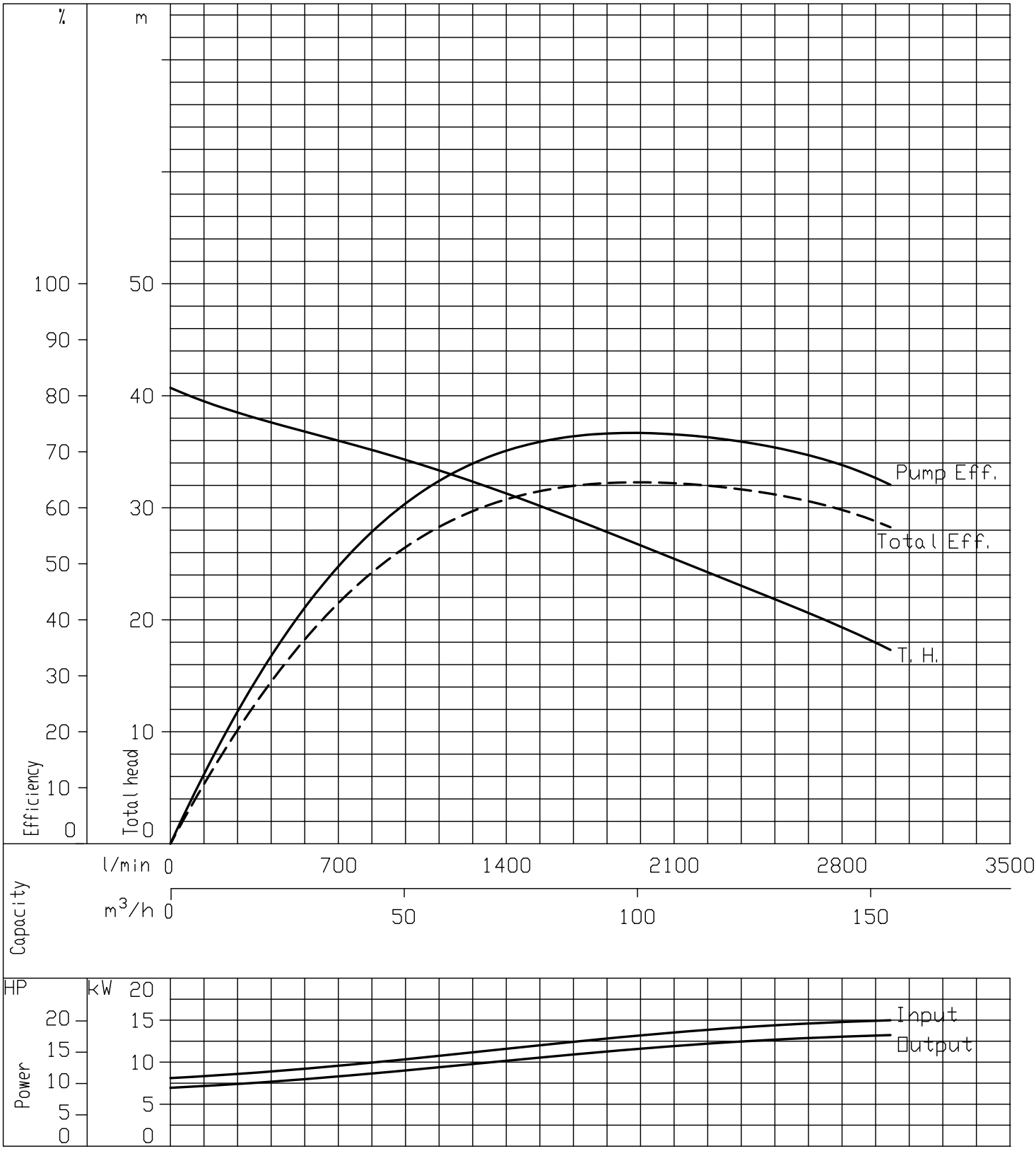

EBARA

DWG. No.	F8-2433053-00

Ebara Submersible Sewage Pump

Model DKE

Performance Curve
4 Poles

50Hz

100DKE515_IE3	According to ISO testing code 9906 Grade 3B
50 Hz (Synchronous Speed 1500 min^{-1})	Density=1kg/dm3 Viscosity=1mm2/s

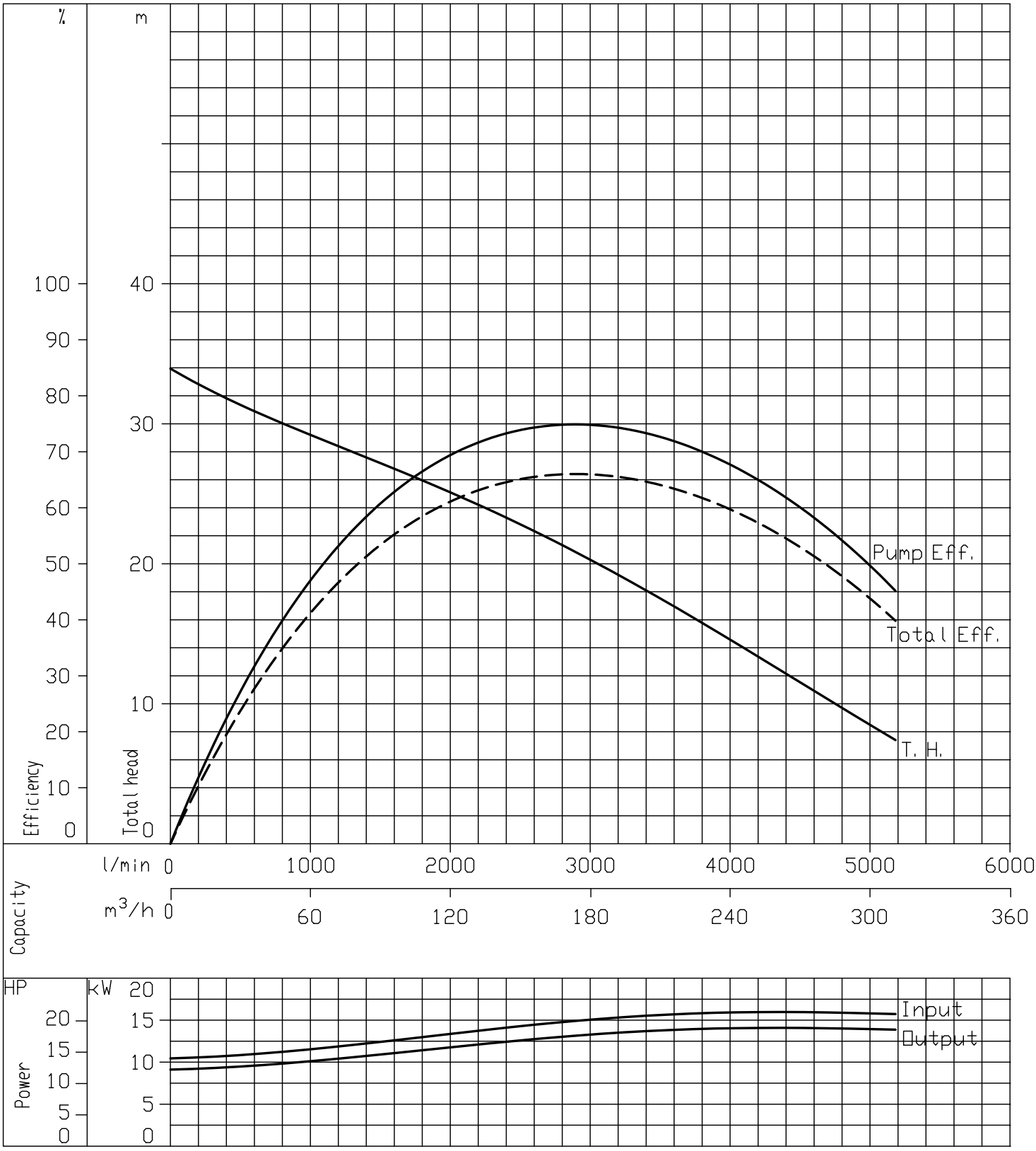

EBARA

DWG. No.	F8-2433055-00

Ebara Submersible Sewage Pump

Model DKE

Performance Curve
4 Poles

50Hz

150DKE515_IE3	According to ISO testing code 9906 Grade 3B
50 Hz (Synchronous Speed 1500 min^{-1})	Density=1kg/dm3 Viscosity=1mm2/s

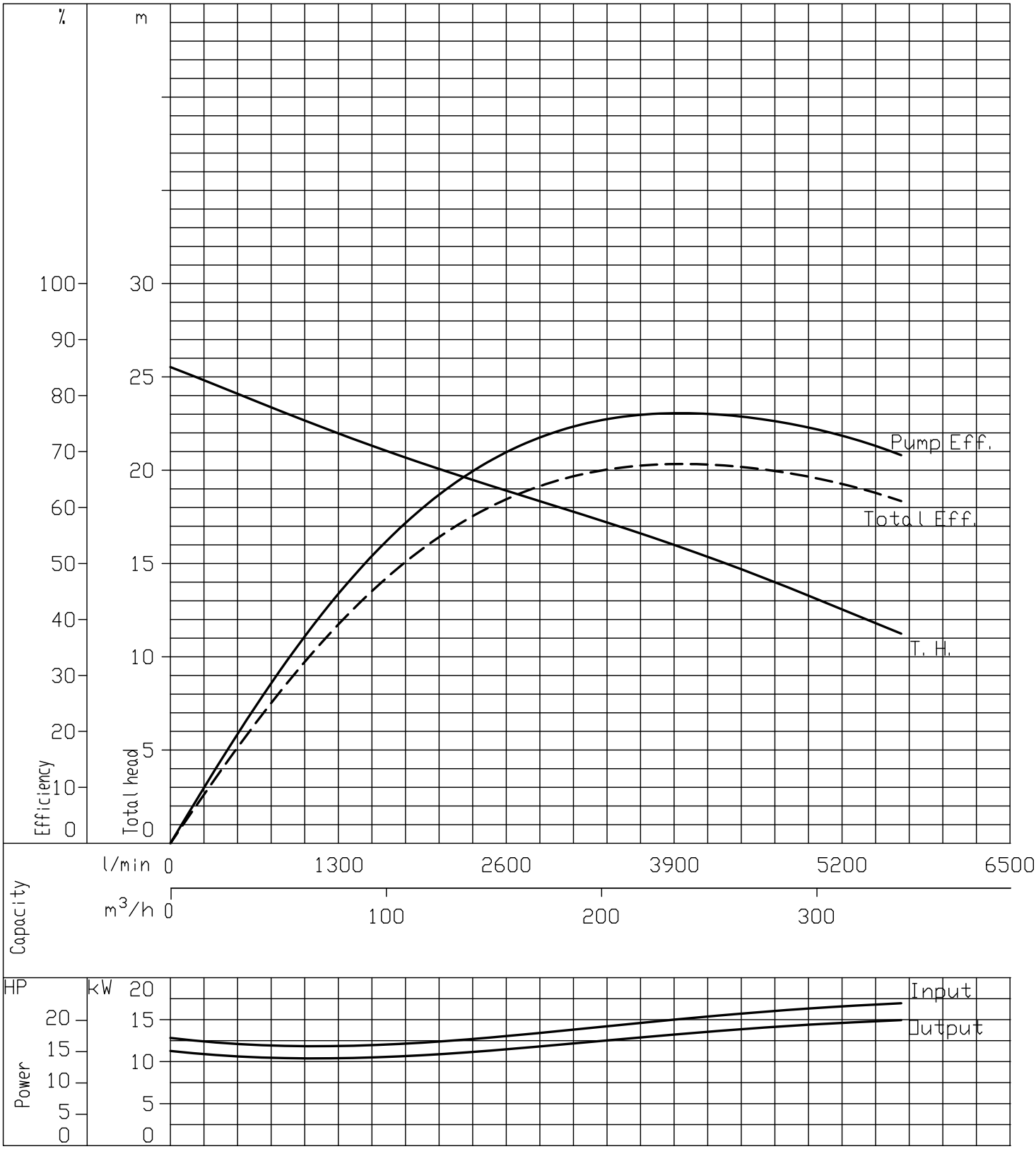

EBARA

DWG. No.	F8-2433057-00

Ebara Submersible Sewage Pump

Model DKE

Performance Curve
4 Poles

50Hz

200DKE515_IE3	According to ISO testing code 9906 Grade 3B
50 Hz (Synchronous Speed 1500 min^{-1})	Density=1kg/dm3 Viscosity=1mm2/s

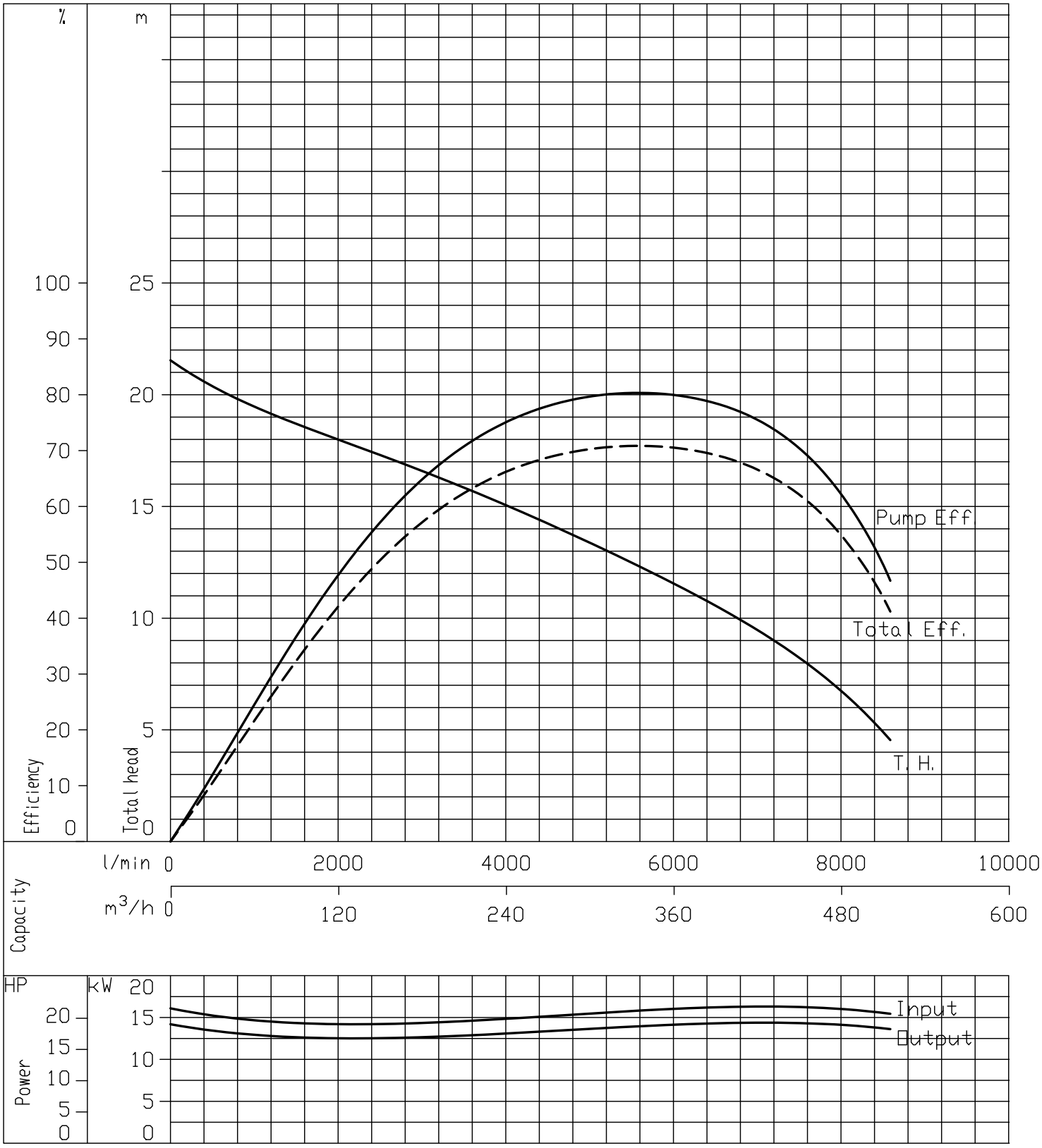

EBARA

DWG. No.	F8-2433059-00

Ebara Submersible Sewage Pump

Model DKE

Performance Curve
4 Poles

50Hz

250DKE515_IE3	According to ISO testing code 9906 Grade 3B
50 Hz (Synchronous Speed 1500 min^{-1})	Density=1kg/dm3 Viscosity=1mm2/s

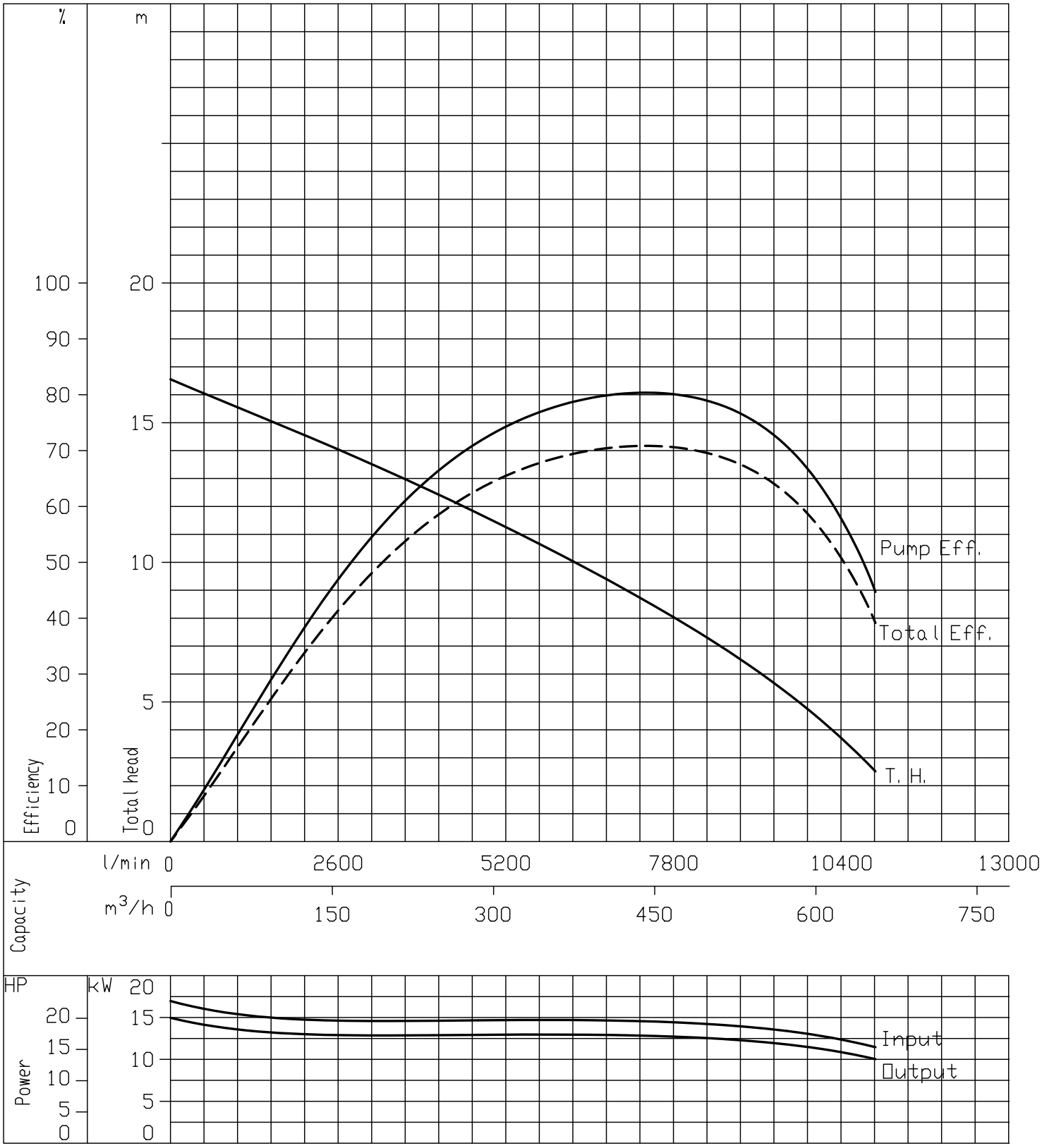

EBARA

DWG. No.	F8-2433061-00

Ebara Submersible Sewage Pump

Model DKE

Performance Curve
4 Poles

50Hz

100DKEB518_IE3	According to ISO testing code 9906 Grade 3B
50 Hz (Synchronous Speed 1500 min^{-1})	Density=1kg/dm3 Viscosity=1mm2/s

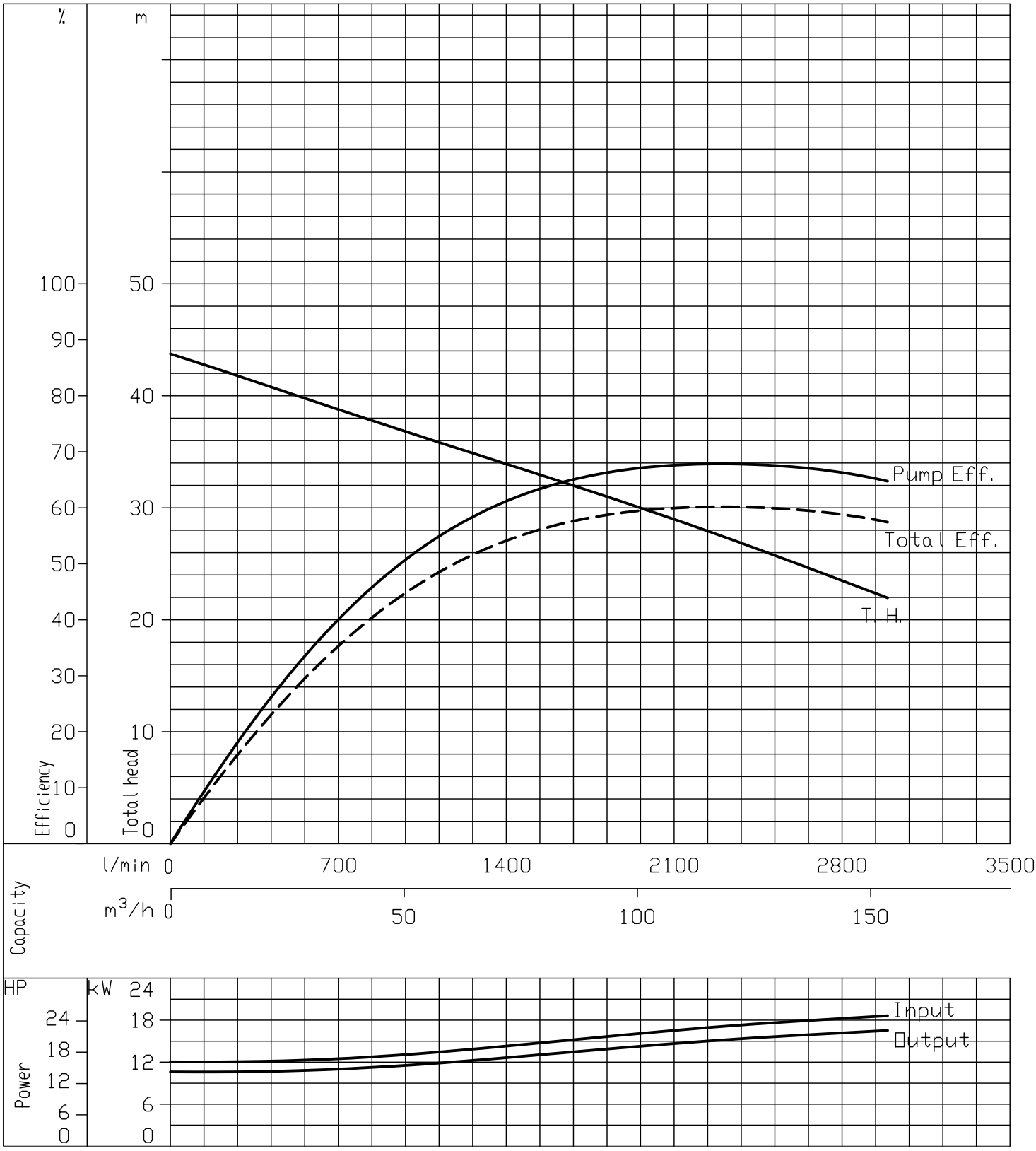

EBARA

DWG. No.	F8-2433063-00

Ebara Submersible Sewage Pump

Model DKE

Performance Curve

4 Poles

50Hz

100DKE518_IE3	According to ISO testing code 9906 Grade 3B
50 Hz (Synchronous Speed 1500 min^{-1})	Density=1kg/dm3 Viscosity=1mm2/s

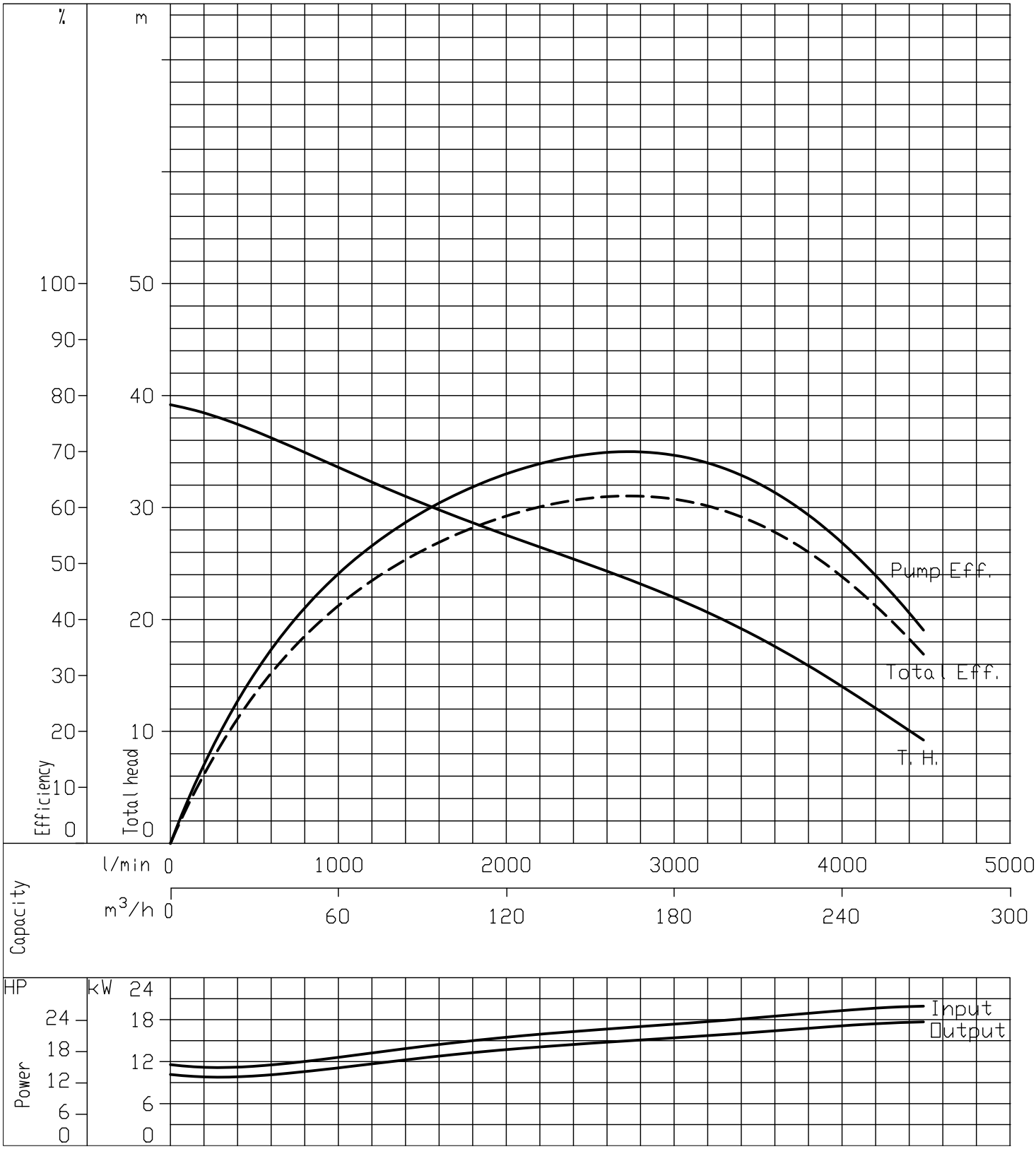

EBARA

DWG. No.	F8-2433065-00

Ebara Submersible Sewage Pump

Model DKE

Performance Curve
4 Poles

50Hz

150DKE518_IE3	According to ISO testing code 9906 Grade 3B
50 Hz (Synchronous Speed 1500 min^{-1})	Density=1kg/dm3 Viscosity=1mm2/s

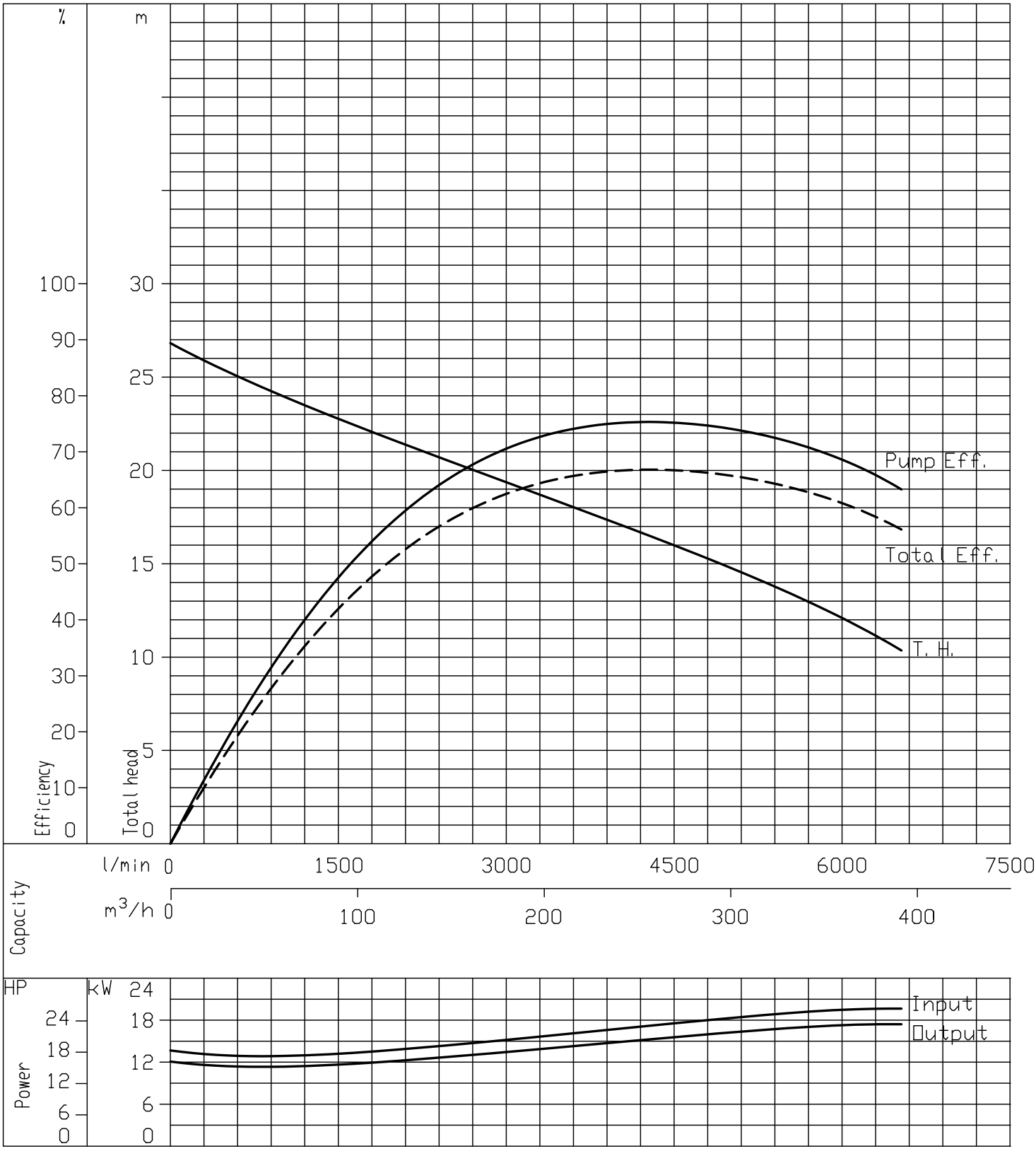

EBARA

DWG. No.	F8-2433067-00

Ebara Submersible Sewage Pump

Model DKE

Performance Curve
4 Poles

50Hz

200DKE518_IE3	According to ISO testing code 9906 Grade 3B
50 Hz (Synchronous Speed 1500 min^{-1})	Density=1kg/dm3 Viscosity=1mm2/s

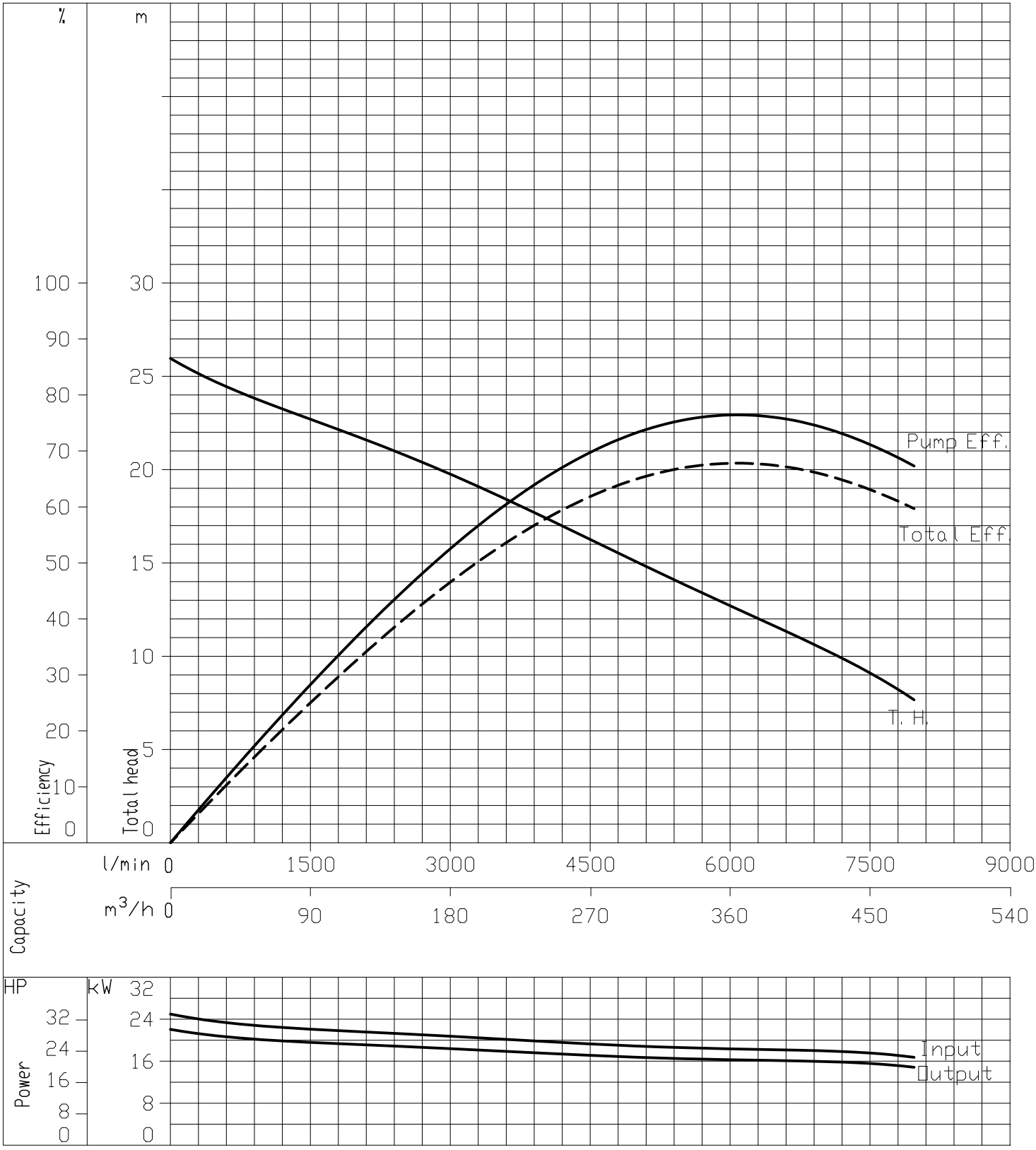

EBARA

DWG. No.	F8-2433069-00

Ebara Submersible Sewage Pump

Model DKE

Performance Curve
4 Poles

50Hz

250DKE518_IE3	According to ISO testing code 9906 Grade 3B
50 Hz (Synchronous Speed 1500 min^{-1})	Density=1kg/dm3 Viscosity=1mm2/s

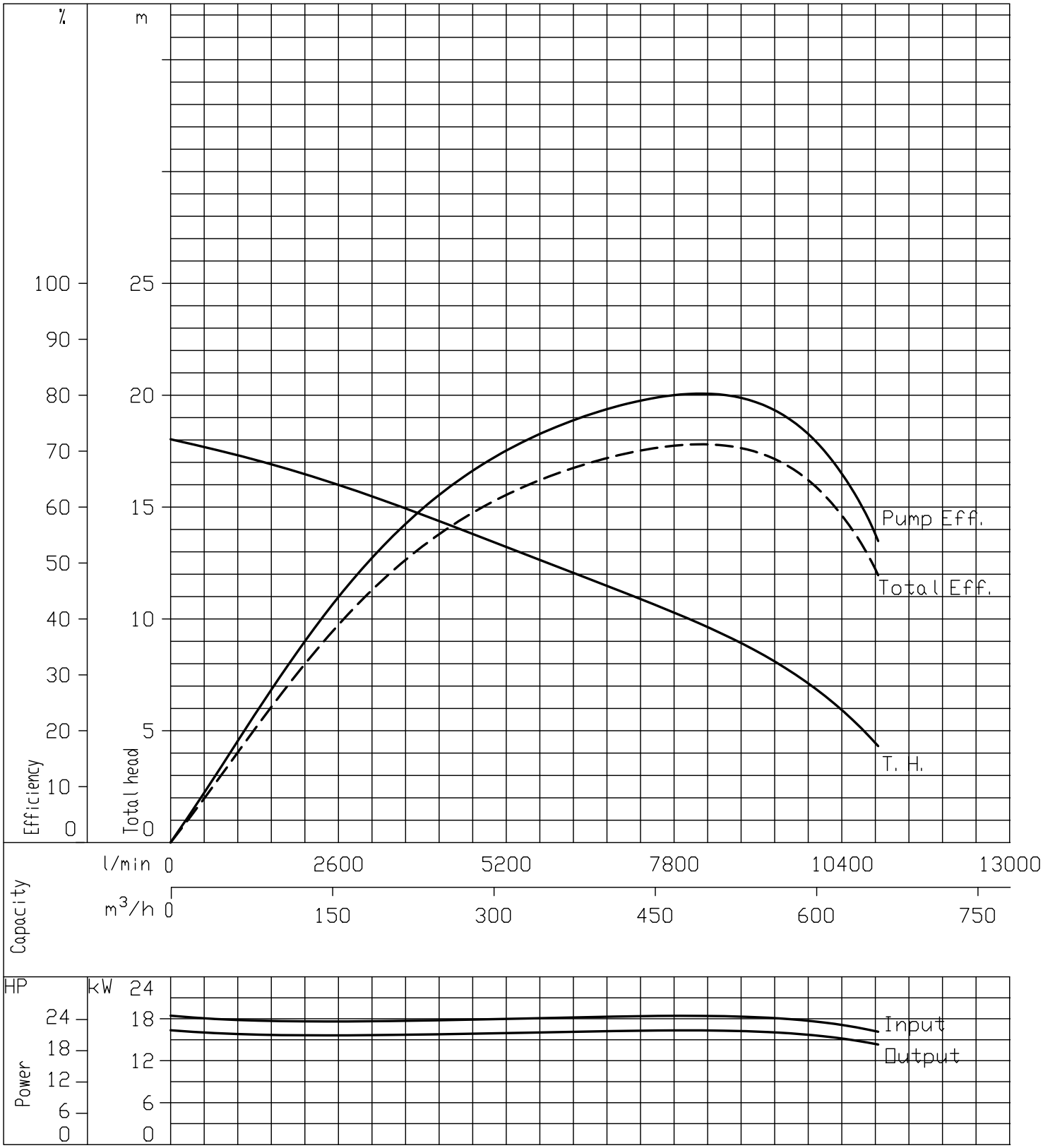

EBARA

DWG. No.	F8-2433071-00

Ebara Submersible Sewage Pump

Model DKE

Performance Curve
4 Poles

50Hz

100DKE522_IE3	According to ISO testing code 9906 Grade 3B
50 Hz (Synchronous Speed 1500 min^{-1})	Density=1kg/dm3 Viscosity=1mm2/s

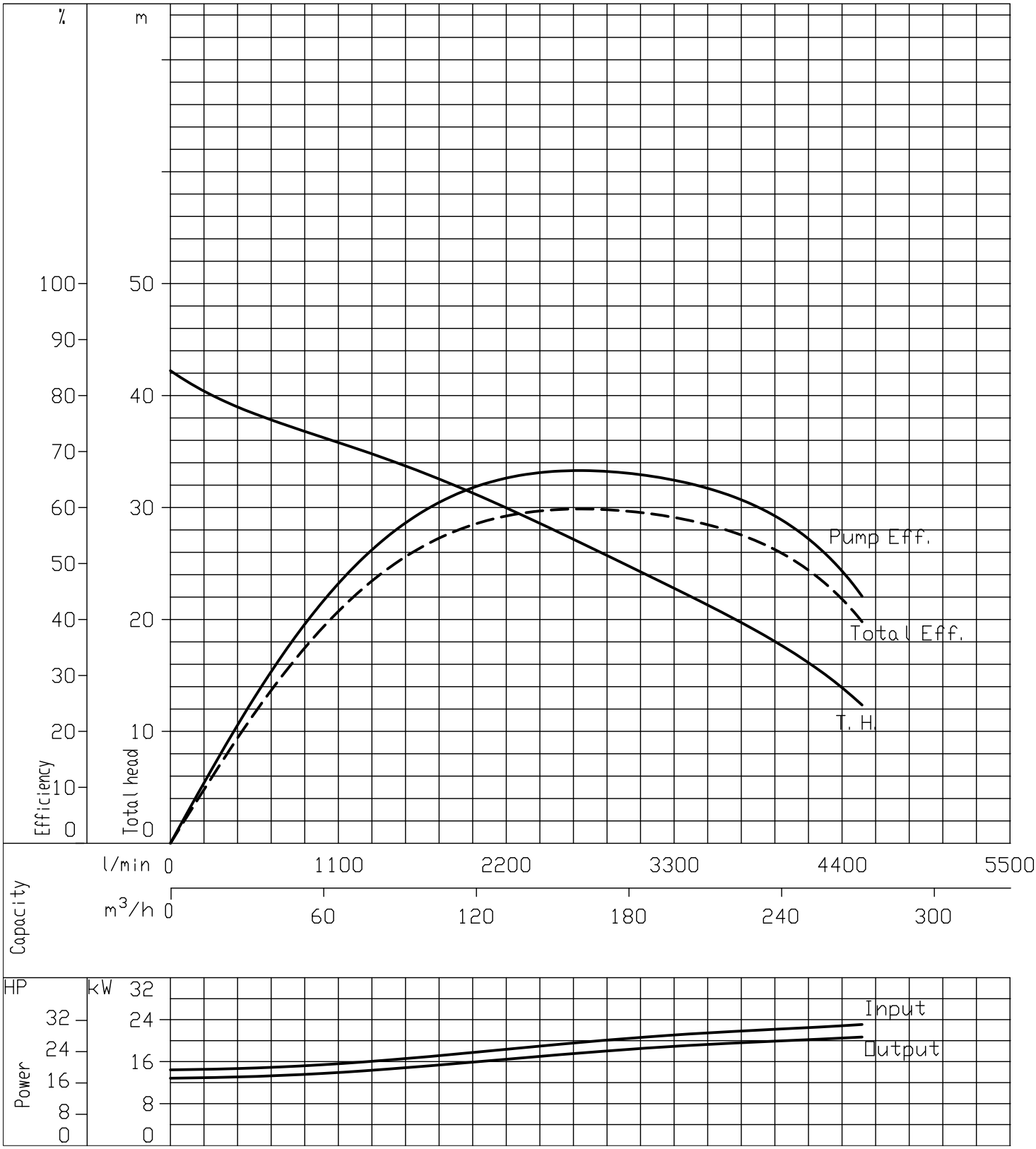

EBARA

DWG. No.	F8-2433073-00

Ebara Submersible Sewage Pump

Model DKE

Performance Curve

4 Poles

50Hz

150DKE522_IE3	According to ISO testing code 9906 Grade 3B
50 Hz (Synchronous Speed 1500 min^{-1})	Density=1kg/dm3 Viscosity=1mm2/s

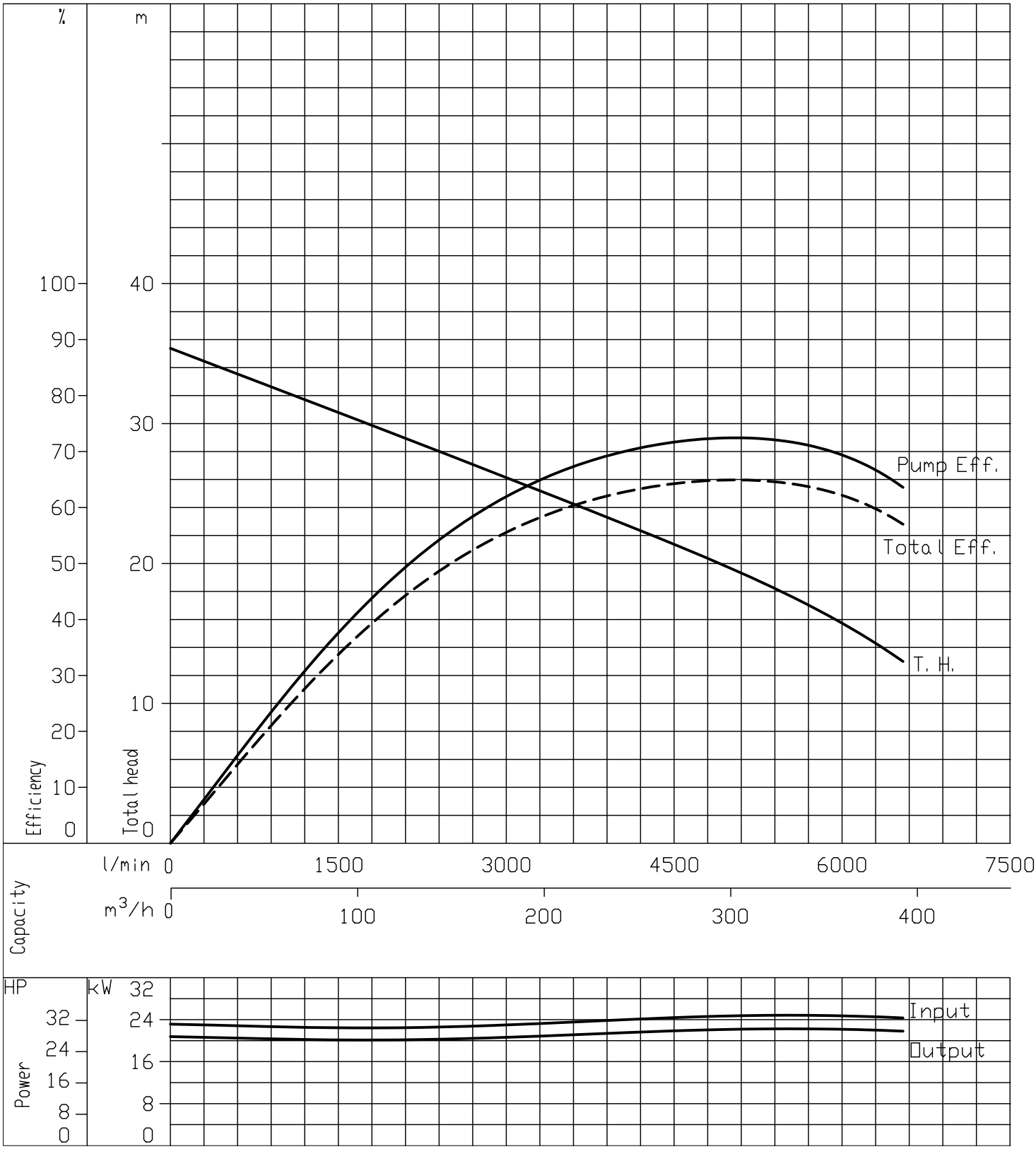

EBARA

DWG. No.	F8-2433075-00

Ebara Submersible Sewage Pump

Model DKE

Performance Curve
4 Poles

50Hz

200DKE522_IE3	According to ISO testing code 9906 Grade 3B
50 Hz (Synchronous Speed 1500 min^{-1})	Density=1kg/dm3 Viscosity=1mm2/s

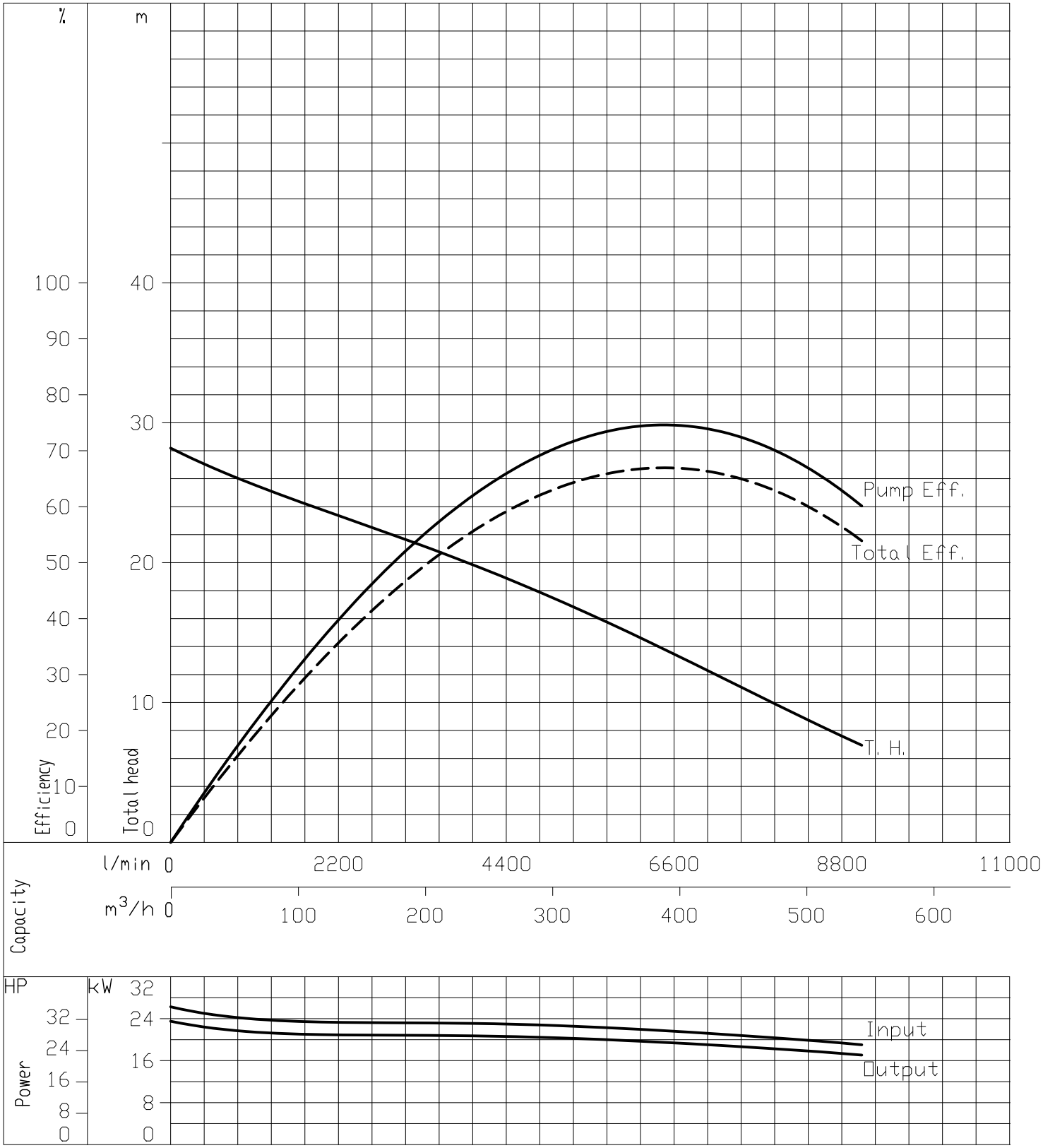

EBARA

DWG. No.	F8-2433077-00

Ebara Submersible Sewage Pump

Model DKE

Performance Curve
4 Poles

50Hz

250DKE522_IE3	According to ISO testing code 9906 Grade 3B
50 Hz (Synchronous Speed 1500 min^{-1})	Density=1kg/dm3 Viscosity=1mm2/s

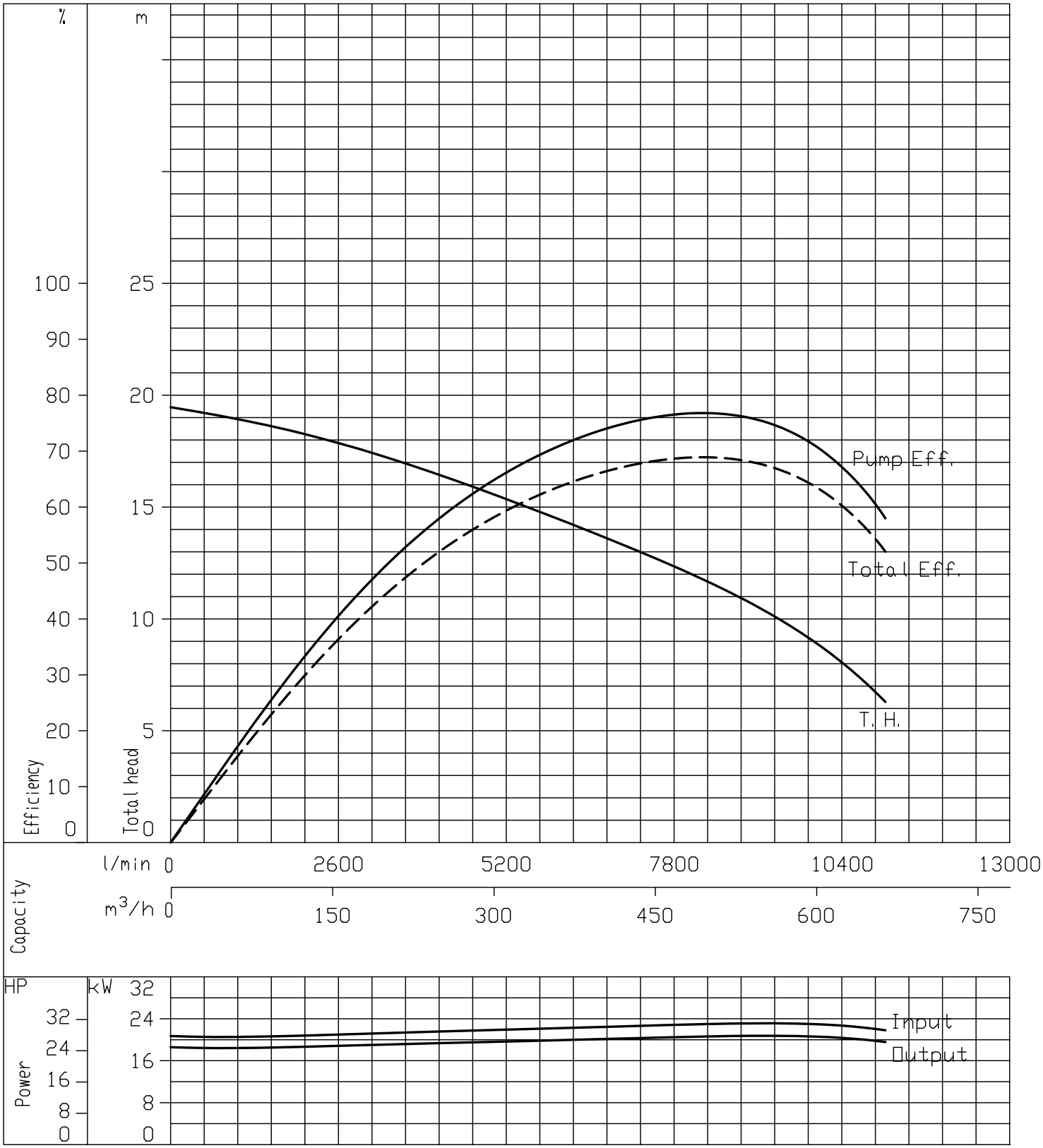

EBARA

DWG. No.	F8-2433079-00

Ebara Submersible Sewage Pump

Model DKE

Performance Curve
4 Poles

50Hz

150DKE530_IE3	According to ISO testing code 9906 Grade 3B
50 Hz (Synchronous Speed 1500 min^{-1})	Density=1kg/dm3 Viscosity=1mm2/s

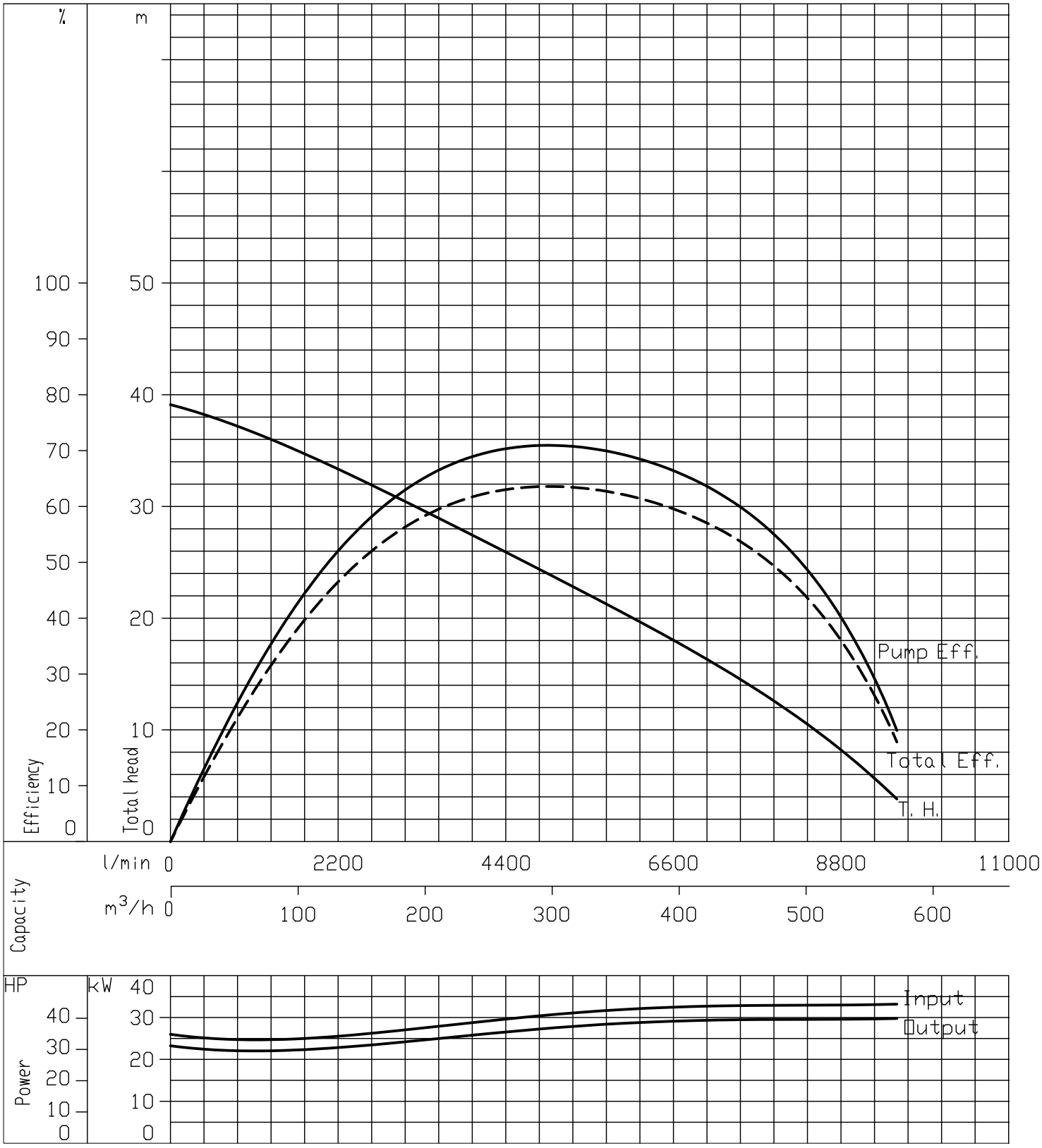

EBARA

DWG. No.	F8-2433437-00

Ebara Submersible Sewage Pump

Model DKE

Performance Curve
4 Poles

50Hz

200DKE530_IE3	According to ISO testing code 9906 Grade 3B
50 Hz (Synchronous Speed 1500 min^{-1})	Density=1kg/dm3 Viscosity=1mm2/s

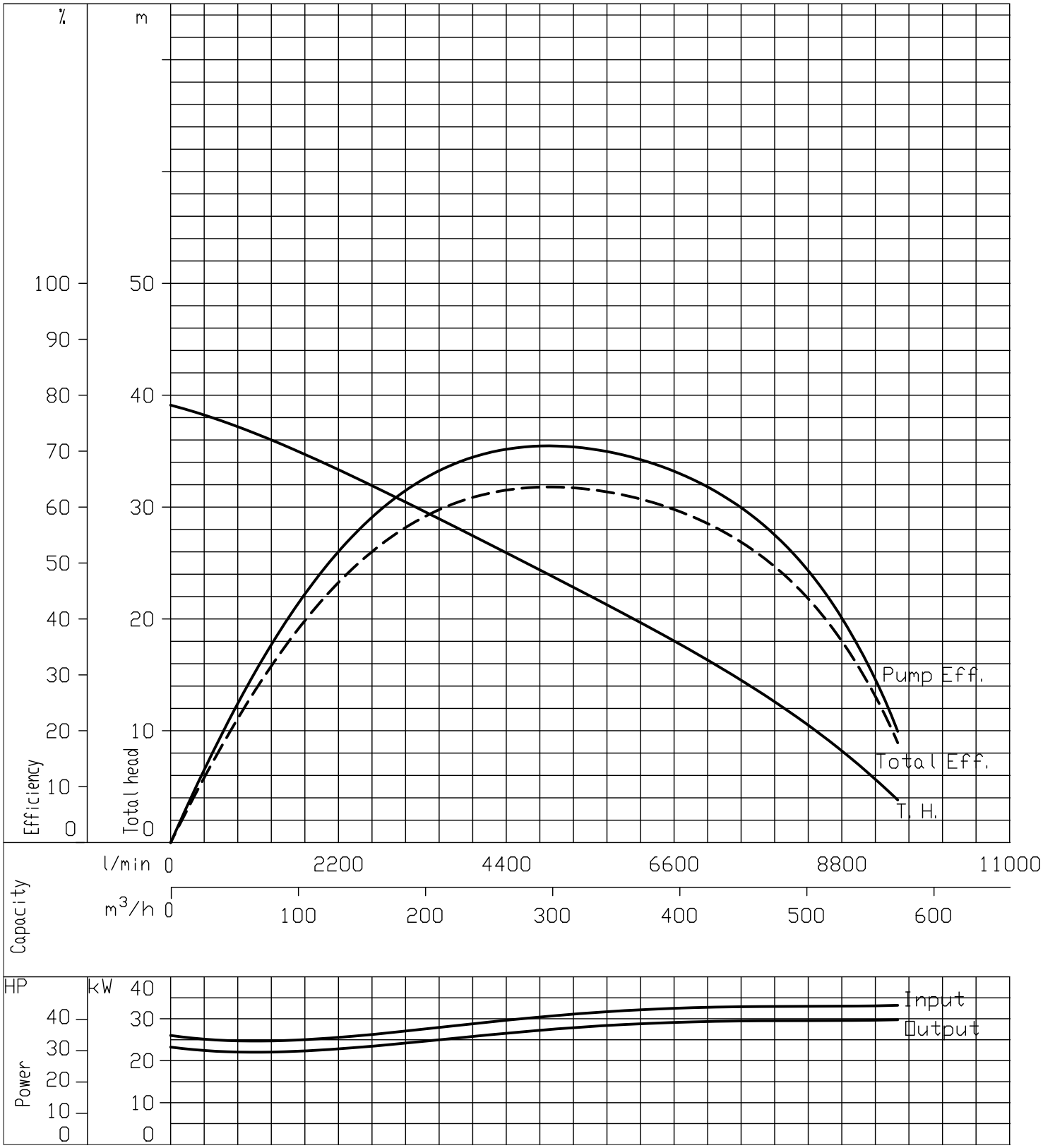

EBARA

DWG. No.	F8-2433439-00

Ebara Submersible Sewage Pump

Model DKE

Performance Curve
4 Poles

50Hz

250DKE530_IE3	According to ISO testing code 9906 Grade 3B
50 Hz (Synchronous Speed 1500 min^{-1})	Density=1kg/dm3 Viscosity=1mm2/s

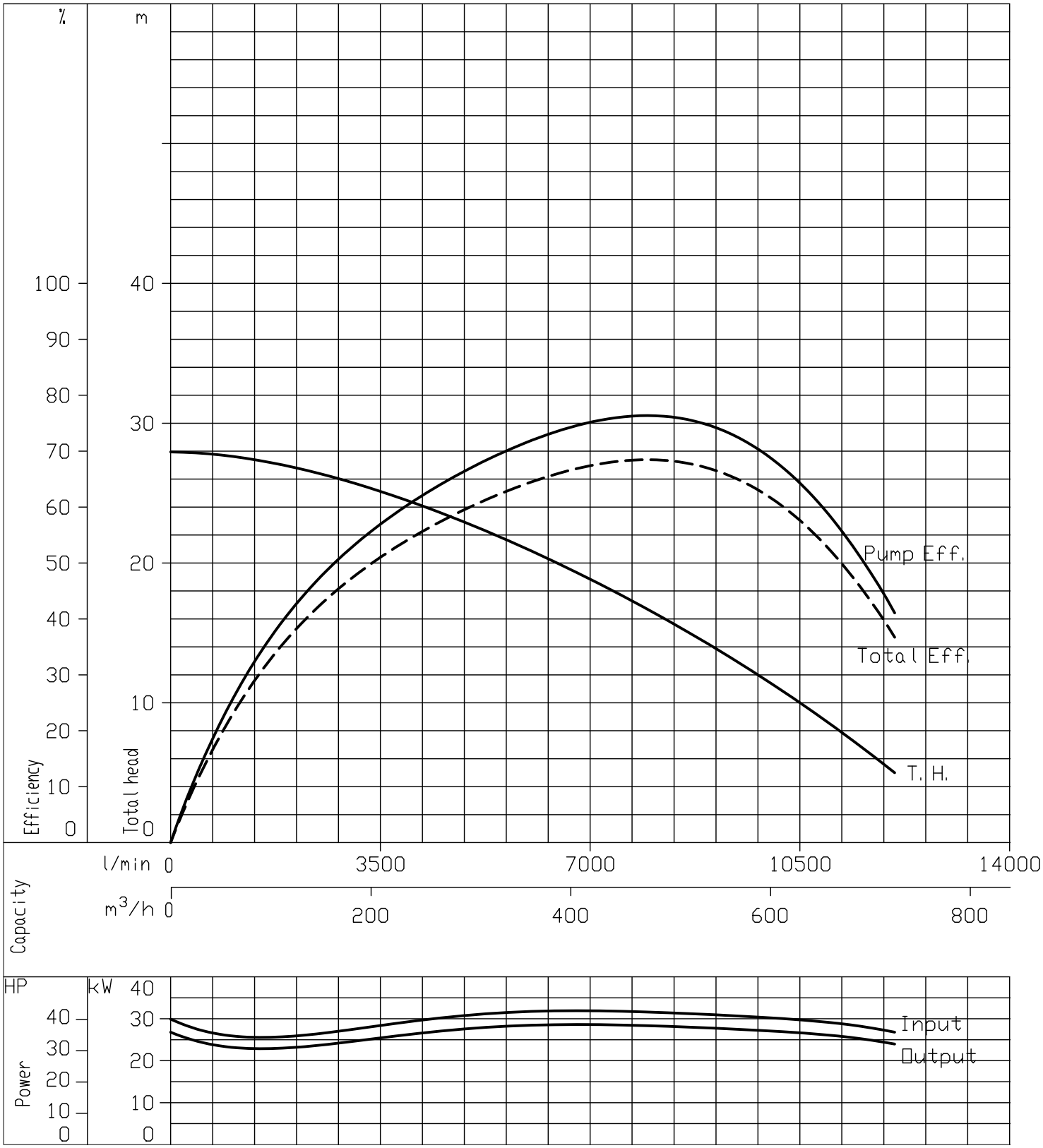

EBARA

DWG. No.	F8-2433441-00

Ebara Submersible Sewage Pump

Model DKE

Performance Curve
4 Poles

50Hz

300DKE530_IE3	According to ISO testing code 9906 Grade 3B
50 Hz (Synchronous Speed 1500 min^{-1})	Density=1kg/dm3 Viscosity=1mm2/s

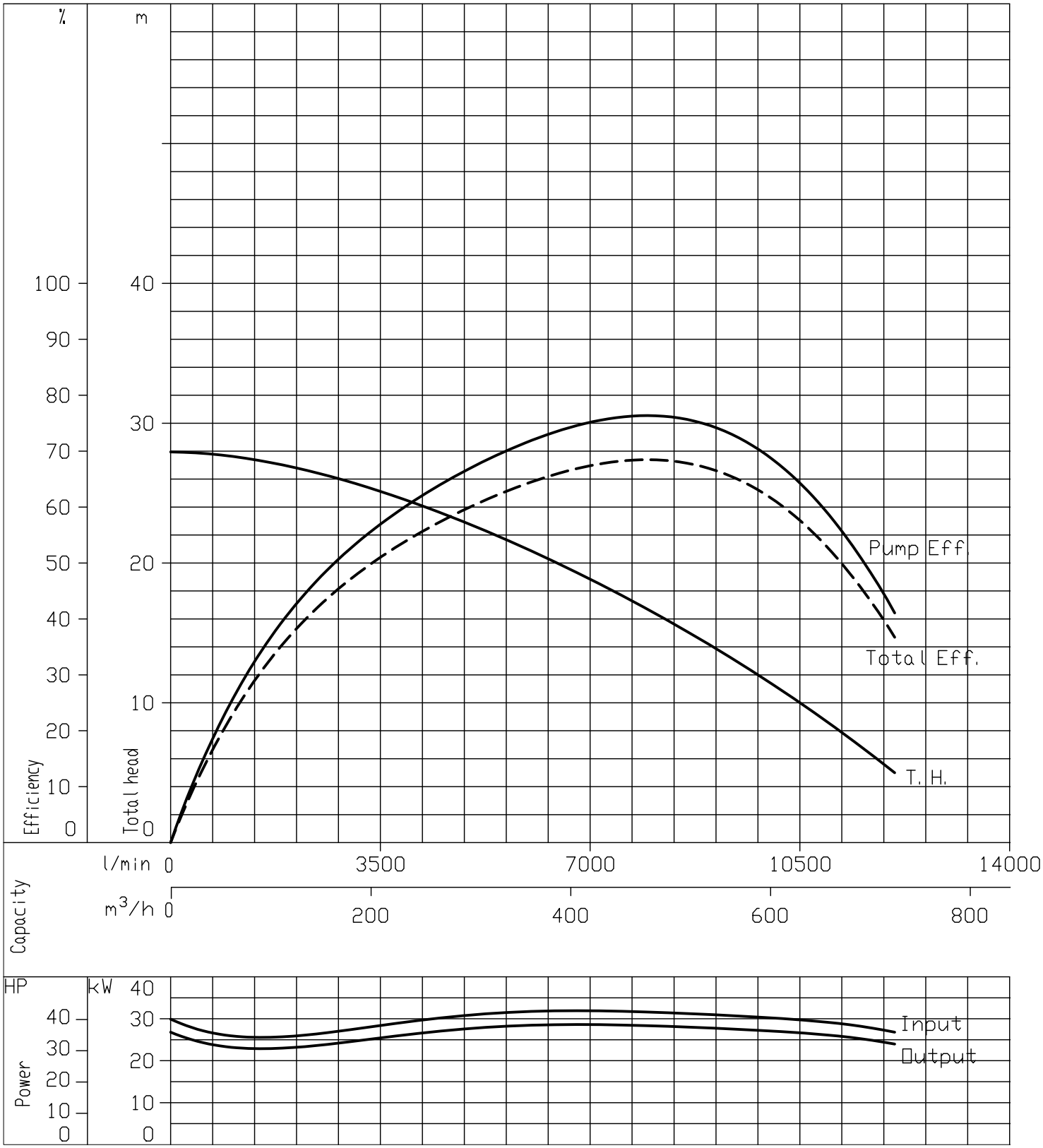

EBARA

DWG. No.	F8-2433443-00

Ebara Submersible Sewage Pump

Model DKE

Performance Curve
4 Poles

50Hz

150DKE537_IE3	According to ISO testing code 9906 Grade 3B
50 Hz (Synchronous Speed 1500 min^{-1})	Density=1kg/dm3 Viscosity=1mm2/s

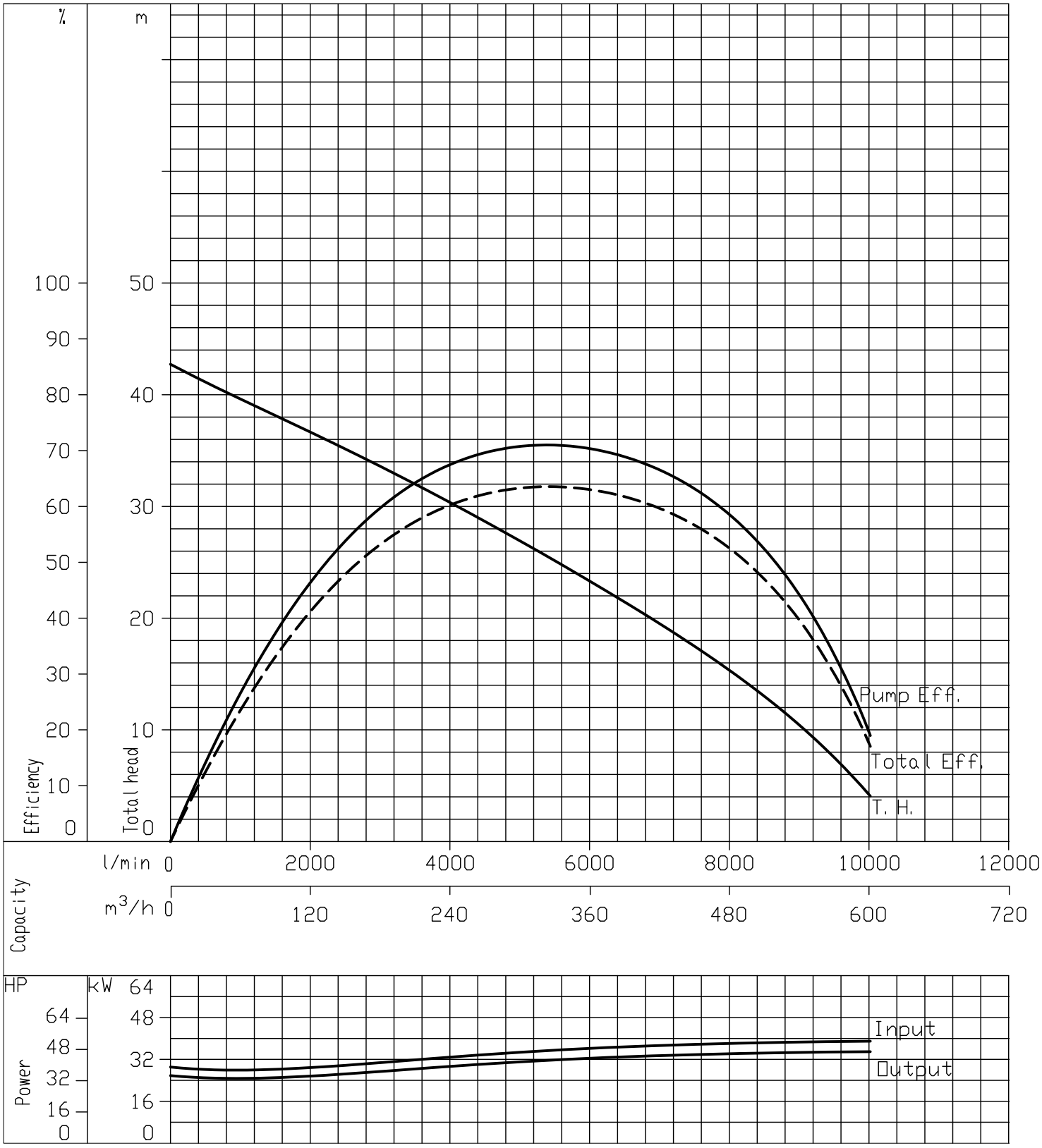

EBARA

DWG. No.	F8-2433445-00

Ebara Submersible Sewage Pump

Model DKE

Performance Curve
4 Poles

50Hz

200DKE537_IE3	According to ISO testing code 9906 Grade 3B
50 Hz (Synchronous Speed 1500 min^{-1})	Density=1kg/dm3 Viscosity=1mm2/s

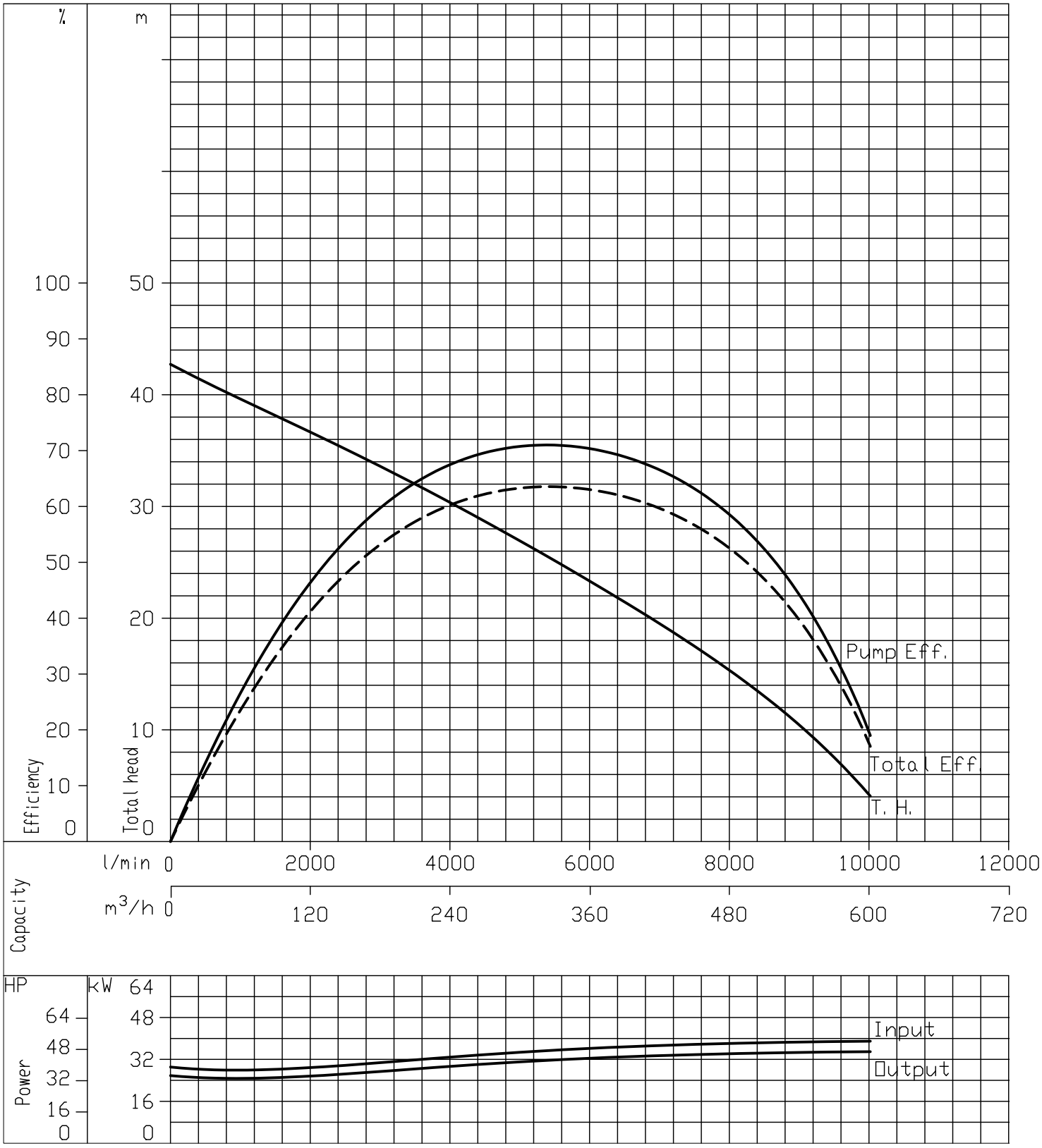

EBARA

DWG. No.	F8-2433447-00

Ebara Submersible Sewage Pump

Model DKE

Performance Curve
4 Poles

50Hz

250DKE537_IE3	According to ISO testing code 9906 Grade 3B
50 Hz (Synchronous Speed 1500 min^{-1})	Density=1kg/dm3 Viscosity=1mm2/s

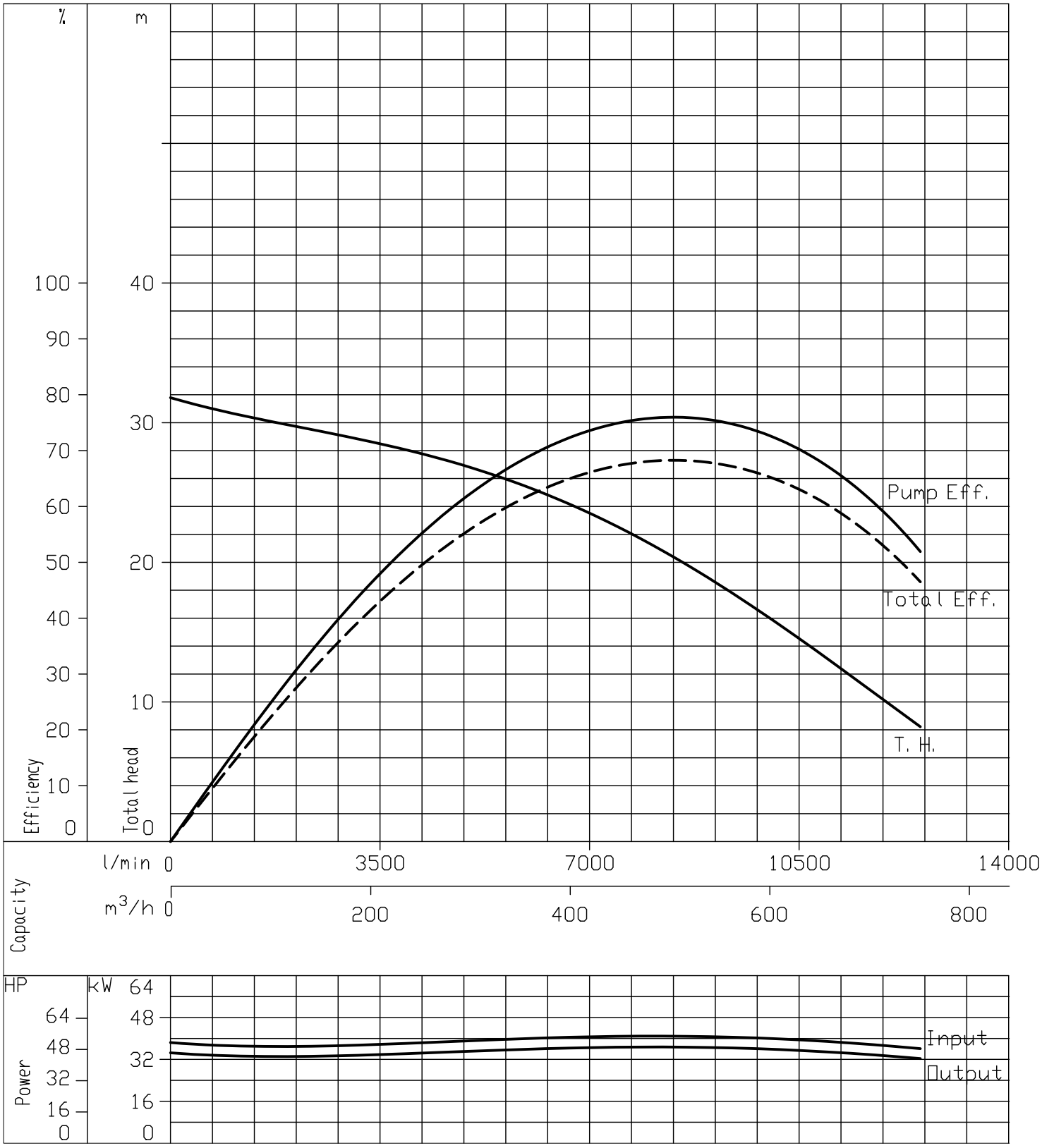

EBARA

DWG. No.	F8-2433449-00

Ebara Submersible Sewage Pump

Model DKE

Performance Curve
4 Poles

50Hz

300DKE537_IE3	According to ISO testing code 9906 Grade 3B
50 Hz (Synchronous Speed 1500 min^{-1})	Density=1kg/dm3 Viscosity=1mm2/s

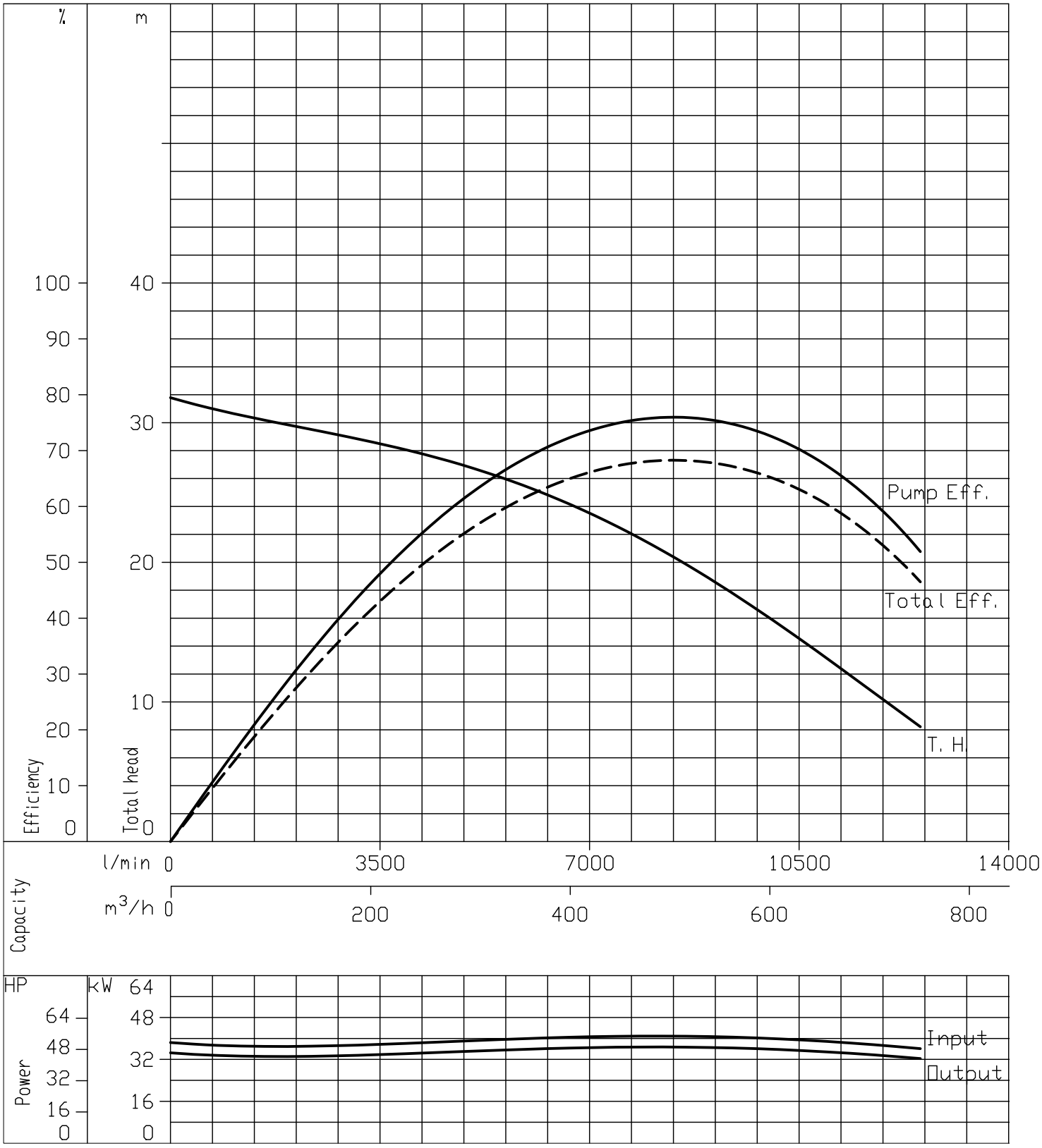

EBARA

DWG. No.	F8-2433451-00

Ebara Submersible Sewage Pump

Model DKE

Performance Curve
4 Poles

50Hz

150DKE545_IE3	According to ISO testing code 9906 Grade 3B
50 Hz (Synchronous Speed 1500 min^{-1})	Density=1kg/dm3 Viscosity=1mm2/s

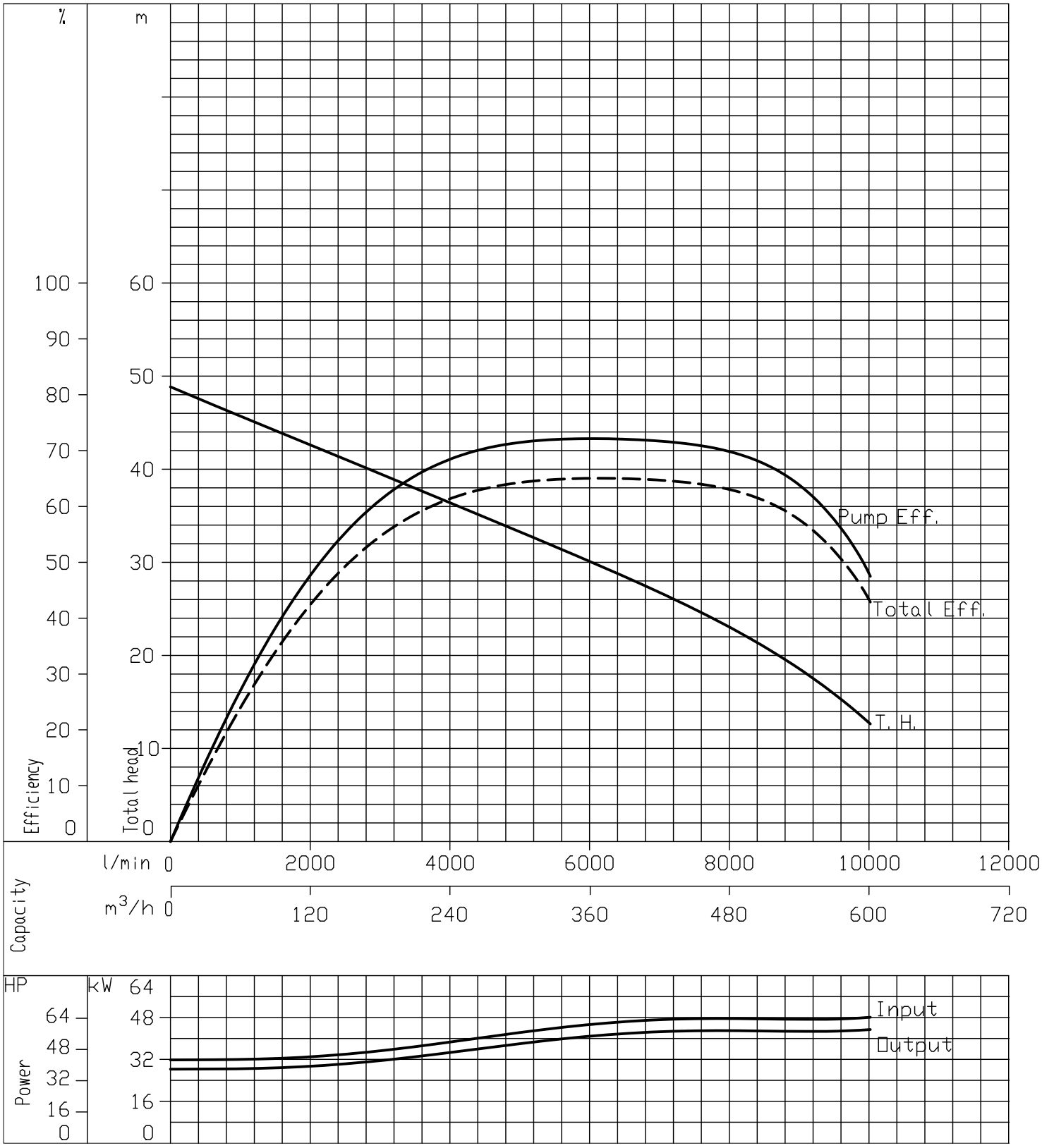

EBARA

DWG. No.	F8-2433453-00

Ebara Submersible Sewage Pump

Model DKE

Performance Curve
4 Poles

50Hz

200DKE545_IE3	According to ISO testing code 9906 Grade 3B
50 Hz (Synchronous Speed 1500 min^{-1})	Density=1kg/dm3 Viscosity=1mm2/s

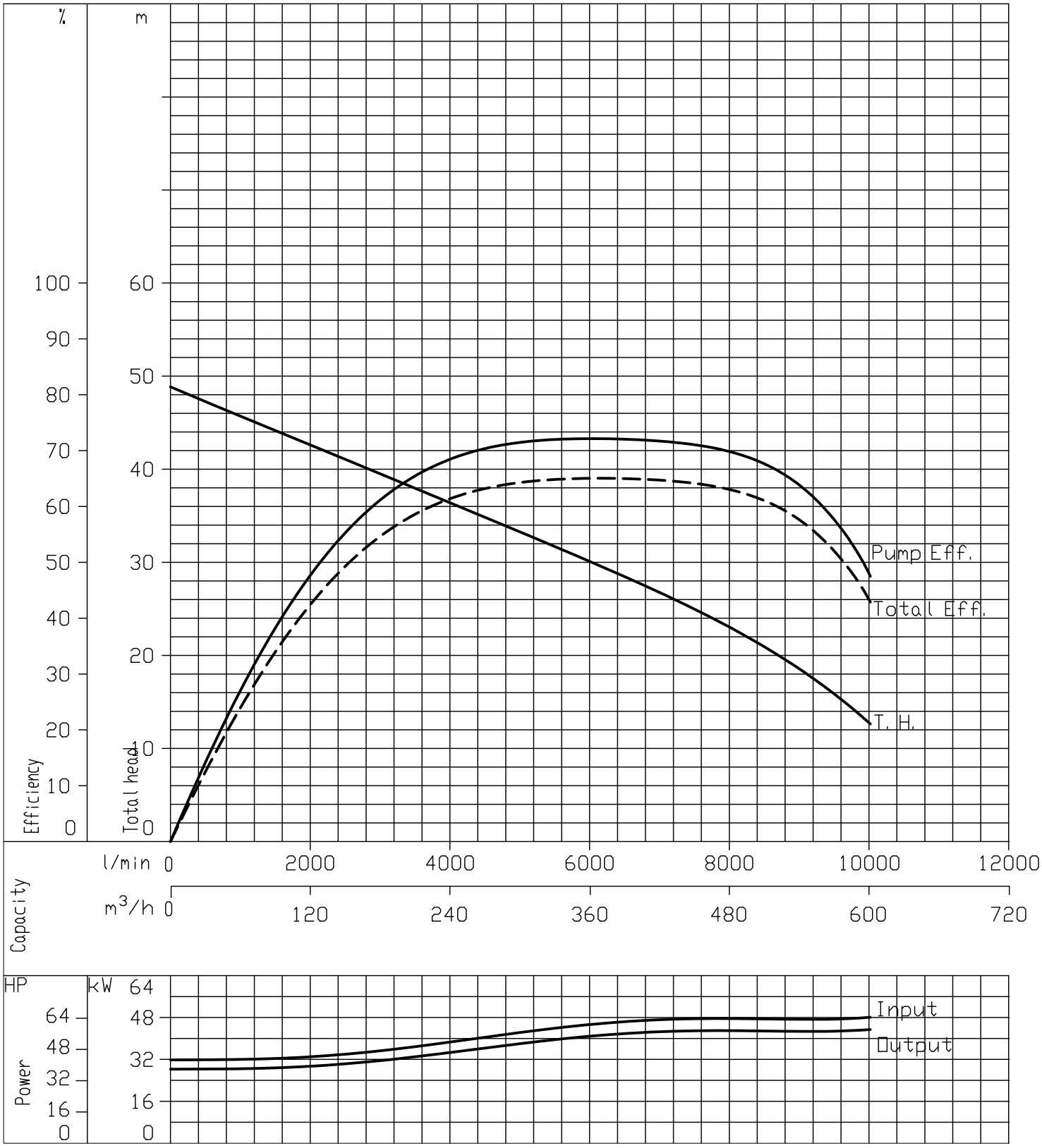

EBARA

DWG. No.	F8-2433455-00

Ebara Submersible Sewage Pump

Model DKE

Performance Curve
4 Poles

50Hz

250DKE545_IE3	According to ISO testing code 9906 Grade 3B
50 Hz (Synchronous Speed 1500 min^{-1})	Density=1kg/dm3 Viscosity=1mm2/s

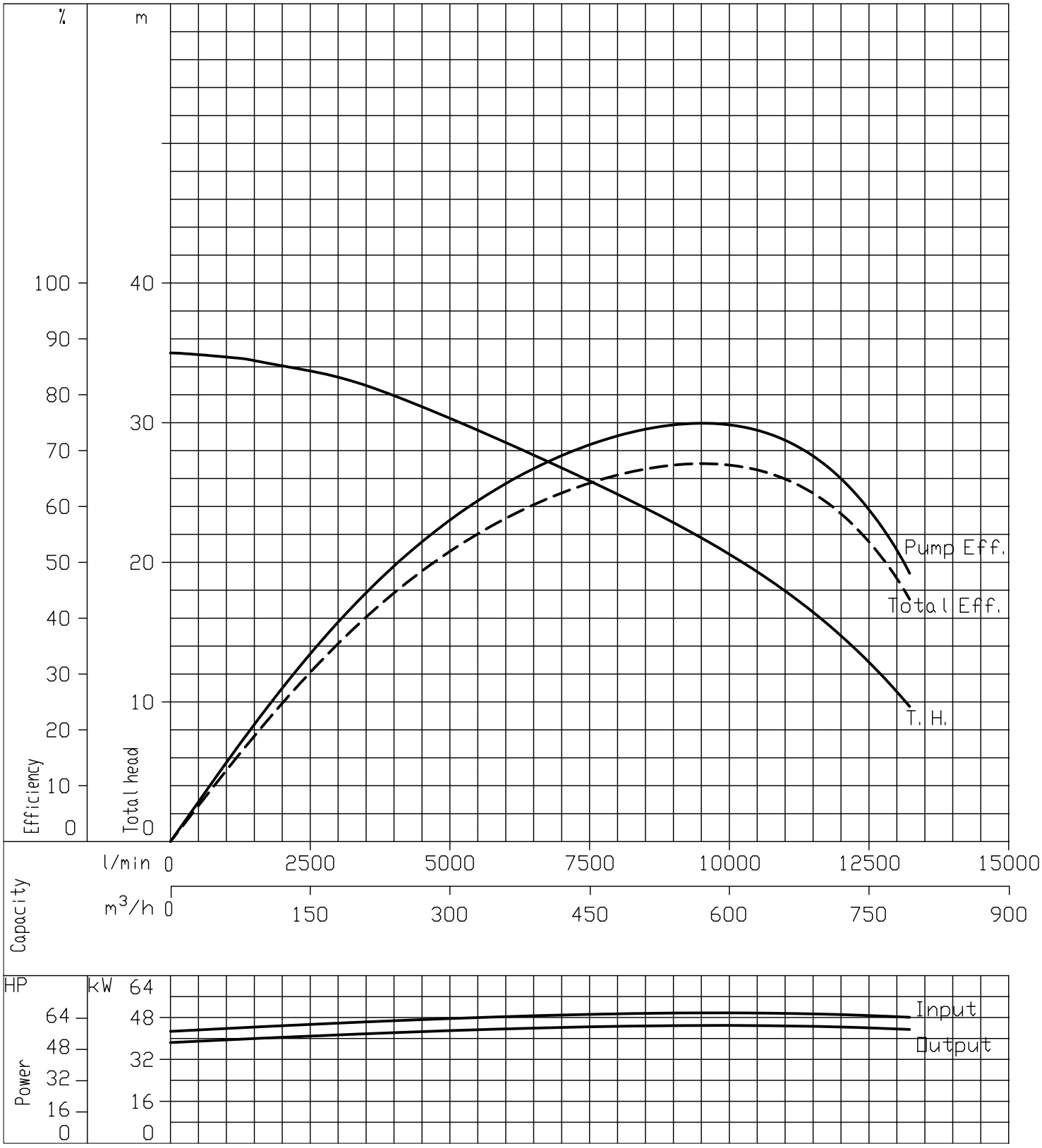

EBARA

DWG. No.	F8-2433457-00

Ebara Submersible Sewage Pump

Model DKE

Performance Curve
4 Poles

50Hz

300DKE545_IE3	According to ISO testing code 9906 Grade 3B
50 Hz (Synchronous Speed 1500 min^{-1})	Density=1kg/dm3 Viscosity=1mm2/s

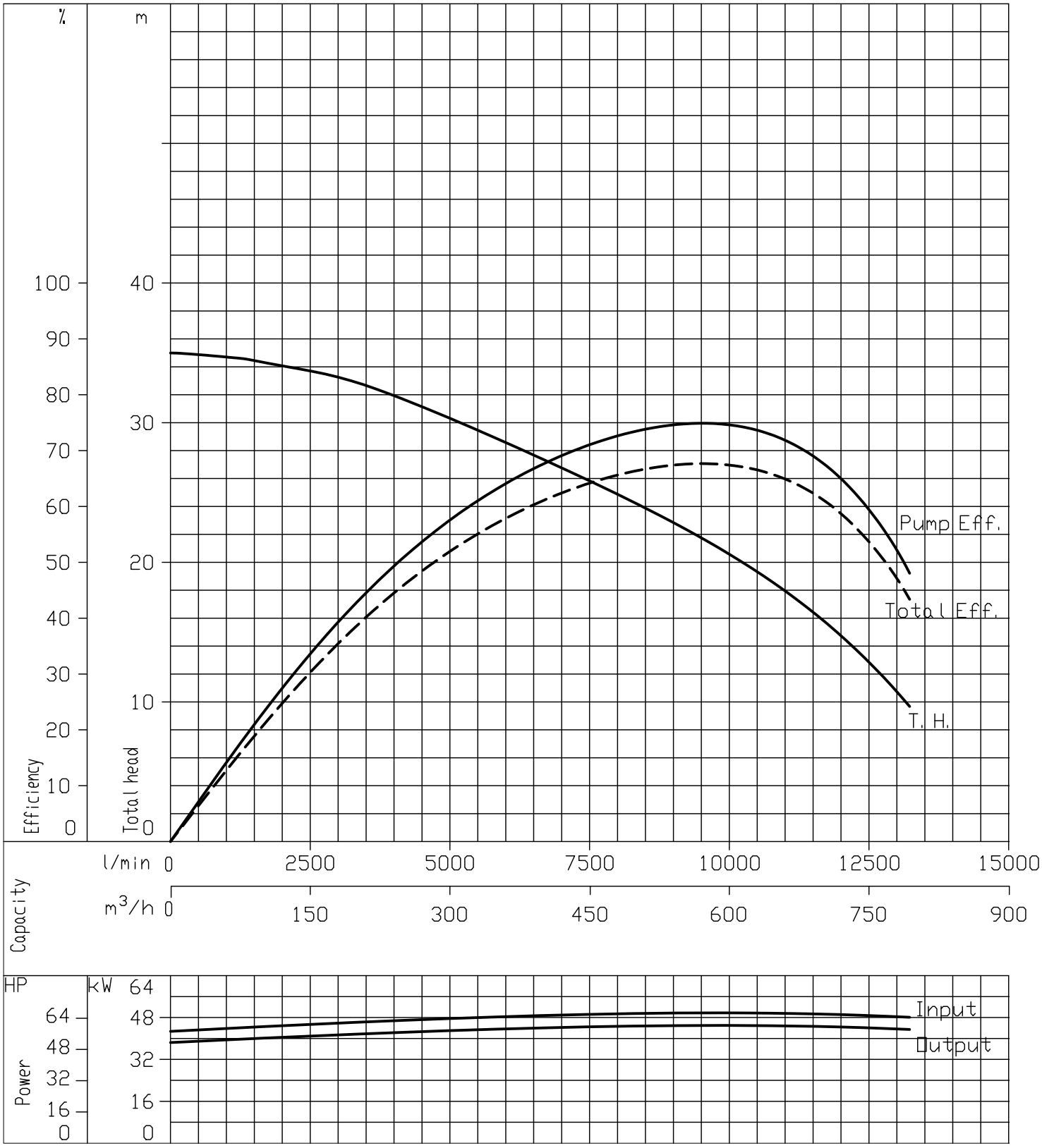

EBARA

DWG. No.	F8-2433459-00

QDC Selection 50Hz

QDC Selection Table	QDC Model	Size				Applicable Model
		Dischrege Flange φ	Dischrege Elbow φ	QDC Body φ	Casing Flange φ	DKE
LM 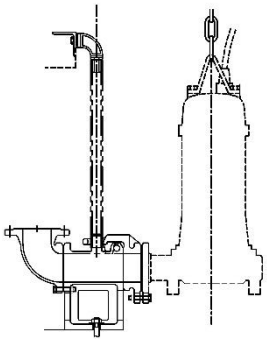	LM65 DI	65	65×65	65	65	65DKE51.5
	LM80 DI	80	80×80	80	80	80DKE 1.5-3.7kW
LL Separated Type 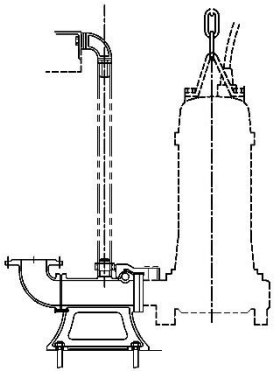	LL80 DI	80	80×80	80	80	80DKE 5.5-7.5kW
	LL100 F	100	100×100	100	100	100DKE 3.7-22kW
	LL150 F	150	150×150	150	150	150DKE 5.5-18.5kW
	LL150 YF	150	150×150	150	150	150DKE522
	LL150	150	150×150	150	150	150DKE 30-45kW
		200	150×200	150	150	200DKE 30-45kW
LL Combined Type 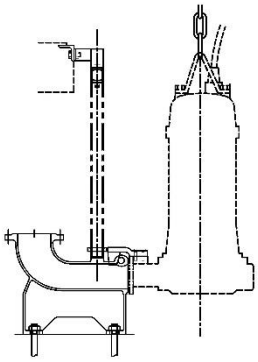	LL250 F	250		200×250	200	200DKE 7.5-15kW
	LL250 YF	250		200×250	200	200DKE 18.5-22kW
	LL300 F	300		250×300	250	250DKE 11-22kW
	LL300	250	(Reducer) 300×250	250×300	250	250DKE 30-45kW
		300		250×300	250	300DKE 30-45kW

Mechanical Seals, Lubrication & Bearings

50Hz

■ **Applicable Models – DKE**

Output kW	Mechanical Seal Type	Lubricant oil	Bearings	
			Bottom	Top
1.5	A-25	Turbine Oil SAE 10W (Turbine Oil 32)	6306ZZ	6204ZZ
2.2	A-30		6307ZZ	6205ZZ
3.7			5307ZZ	6205ZZ
5.5	EAN-40		5309ZZ	6306ZZ
7.5			5309ZZ	6306ZZ
11	EAN-45		6310ZZDR	6308ZZ
15			6310ZZDR	6308ZZ
18.5			6312ZZDR	6309ZZ
22			6312ZZDR	6309ZZ
30	A-60		6314ZZDR	6309ZZ
37			6315ZZDR	63010ZZ
45			6315ZZDR	63010ZZ

Mechanical Seal

No.	Part Name	Material	No.per Set
1	Cup Gasket	N.B.Rubber	1
2	Mating Ring	Ceramic	1
3	Seal Ring	Carbon Graphite	1
4	Spring	304 SS	1
5	Seal Ring	Silicon Carbide	1
6	Mating Ring	Silicon Carbide	1
7	Cup Gasket	N.B.Rubber	1

Type
A-25
A-30

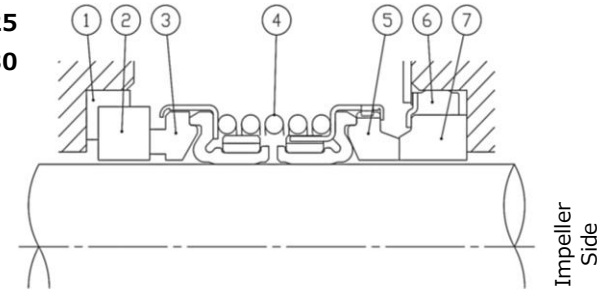

No.	Part Name	Material	No.per Set
1	Cup Gasket	N.B.Rubber	1
2	Mating Ring	Ceramic	1
3	Seal Ring	Carbon Graphite	1
4	Spring	304 SS	1
5	Seal Ring	Silicon Carbide	1
6	Mating Ring	Silicon Carbide	1
7	Cup Gasket	N.B.Rubber	1

Type
EAN-40
EAN-45

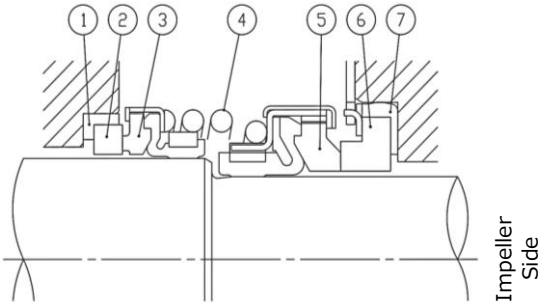

No.	Part Name	Material	No.per Set
1	Cup Gasket	N.B.Rubber	1
2	Mating Ring	Ceramic	1
3	Seal Ring	Carbon Graphite	1
4	Coll Spring	304 SS	1
5	Spring Holder	304 SS	1
6	Snap Ring	Spring Steel	1
7	O-ring	N.B.Rubber	1
8	Mating Ring	Silicon Carbide	1
9	Seal Ring	Silicon Carbide	1
10	Coll Spring	304 SS	1
11	Spring Holder	304 SS	1

Type
A-60

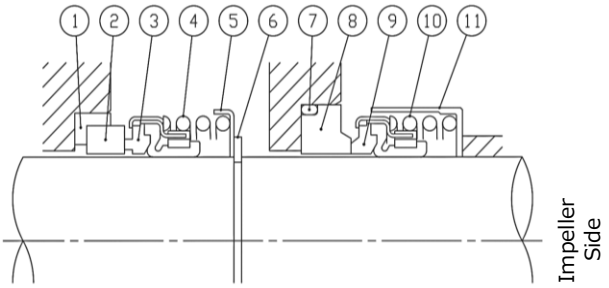

(A) Miniature Thermal Protector

A Miniature Thermal Protector (MTP) is embedded in each winding of the motor as illustrated below, and provides automatic cut off with manual reset. When the temperature of the windings increases and reaches the MTP acting point, an external motor protection circuit (not supplied) is activated.

P1 & P2 (wiring in Blue and Brown), in normally closed contact type, once temperature high, the contact will open, and thus circuit not complete leading to trip and pump stop.

1. Applicable model

Motor Model ZDKEEU3 1.5～45kW

2. Specifications

Type of contact	: b (Normally-Closed)
Acting temperature	: 150±5 ℃
Re-setting temperature	: Approx. 100 ℃
Contact rating	: AC 115V-18A
	AC 230V-13A

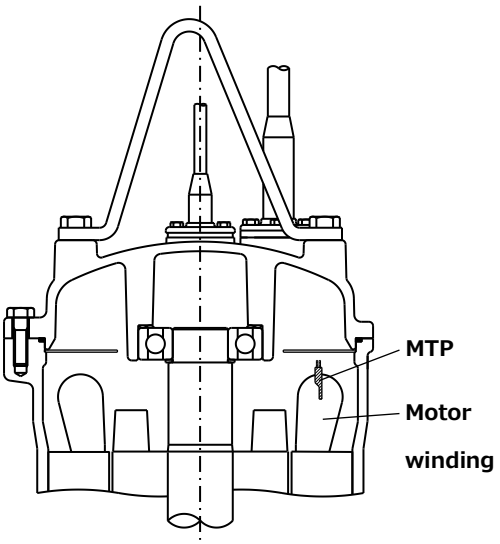

(B) Leakage detector

A built-in float type leakage detector with an encapsulated dry reed switch within the stem is fitted to sense leaking of pumping water and/or seal oil into the motor as a result of failure of the mechanical seal.

1. Applicable model

Motor Model ZDKEEU3 1.5～45kW

2. Specifications

Type of contact	: b (Normally-Closed)
Breaking capacity	: AC 50VA / DC 50W
Max. breaking current	: AC 0.5A / DC 0.5A
Max. operating voltage	: AC 300V / DC 300V

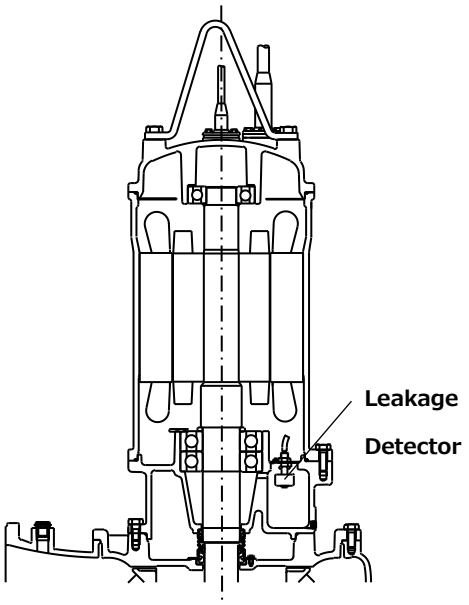

Cable Specifications

50Hz

■ Applicable Motor Models - ZDKEEU3

Motor		Applicable Motor Models	Starting method	Length of cable	Power Cable Material	Number & size of conductor(s)	
						Power Cable(s)	Protector Cable Thermal protector & Leakage detector
	kW						
Three Phase	1.5	ZDKEEU3	DOL	10 m	H07RN-F	4c x 1.5mm^2	Standard model 4c x 1mm2 for Thermal protector & Leakage detector
	2.2		DOL	10 m	H07RN-F	4c x 1.5mm^2	
	3.7		DOL	10 m	H07RN-F	4c x 1.5mm^2	
	5.5		DOL	10 m	H07RN-F	4c x 1.5mm^2	
	7.5		DOL	10 m	H07RN-F	4c x 2.5mm^2	
	11		Y-Δ	10 m	H07RN-F	4c x 4mm^2 x 2cables	
	15		Y-Δ	10 m	H07RN-F	4c x 4mm^2 x 2cables	
	18.5		Y-Δ	10 m	H07RN-F	4c x 4mm^2 x 2cables	
	22		Y-Δ	10 m	H07RN-F	4c x 6mm^2 x 2cables	
	30		Y-Δ	10 m	H07RN-F	4c x 10mm^2 x 2cables	
	37		Y-Δ	10 m	H07RN-F	4c x 10mm^2 x 2cables	
	45		Y-Δ	10 m	H07RN-F	4c x 16mm^2 x 2cables	

Applicable to	Cross sectional area of conductors	No. of conductors	Cable Type	Sheath Material	Insulation Material	Sheath Thickness mm	Insulation Thickness mm	Overall Diameter mm	
Three Phase For Power Cable DOL start motors use 1x4 core, Y-Δ start motors use 2x4 core.	1.5mm^2	4 core	H07RN-F	Chlorinated Polyethylene Rubber	Ethylene Propylene Rubber	1.7	0.8	11.2	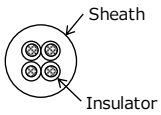
	2.5mm^2					1.9	0.9	13.2	
	4mm^2					2.0	1.0	15.3	
	6mm^2					2.3	1.0	18.0	
	10mm^2					3.4	1.2	23.7	
	16mm^2					3.6	1.2	28.0	
Three Phase For Protector Cable	1mm^2					1.5	0.8	10.3	

Motor Data for Model DKE

50Hz

■ Applicable Motor Model - ZDKEEU3 50Hz 380V

Applicable Motor Model	Phase	Poles	Voltage	Hz	Service Factor	VFD
ZDKEEU3	3	4	380 V	50	1.0	Available

Name-Plate Rating	Output	kW	1.5	2.2	3.7	5.5	7.5
	Phase		3	3	3	3	3
	Pole		4	4	4	4	4
	Voltage	V	380	380	380	380	380
	Current	A	3.5	5.1	8.3	11.7	16.2
	Frequency	Hz	50	50	50	50	50
	Insulation Class		H	H	H	H	H
Speed		min^{-1}	1430	1445	1445	1460	1455
Locked Rotor Torque		%	342	133	128	115	115
Start Current		A	27.2	28.9	45.3	70.92	99.9
No.starts per hour			10	10	10	10	10
Voltage Tolerance			±10%	±10%	±10%	±10%	±10%
Frequency Tolerance			±5%	±5%	±5%	±5%	±5%

Name-Plate Rating	Output	kW	11	15	18.5	22	30	37	45
	Phase		3	3	3	3	3	3	3
	Pole		4	4	4	4	4	4	4
	Voltage	V	380	380	380	380	380	380	380
	Current	A	22.8	30.7	37.1	44.3	60.8	74.5	90.0
	Frequency	Hz	50	50	50	50	50	50	50
	Insulation Class		H	H	H	H	H	H	H
Speed		min^{-1}	1460	1465	1465	1470	1465	1470	1475
Locked Rotor Torque		%	161	182	134	136	183	145	152
Start Current		A	141.9	222.7	237.4	293.1	428.0	496.5	632.8
No.starts per hour			6	6	6	6	6	6	6
Voltage Tolerance			±10%	±10%	±10%	±10%	±10%	±10%	±10%
Frequency Tolerance			±5%	±5%	±5%	±5%	±5%	±5%	±5%

Motor Data for Model DKE 50Hz

■ Applicable Model – ZDKEEU3 50Hz 400V

Applicable Motor Model	Phase	Poles	Voltage	Hz	Service Factor	VFD
ZDKEEU3	3	4	400 V	50	1.0	Available

Name-Plate Rating	Output	kW	1.5	2.2	3.7	5.5	7.5
	Phase		3	3	3	3	3
	Pole		4	4	4	4	4
	Voltage	V	400	400	400	400	400
	Current	A	3.4	5.0	8.1	11.5	15.8
	Frequency	Hz	50	50	50	50	50
	Insulation Class		H	H	H	H	H
Speed		min^{-1}	1435	1455	1445	1460	1465
Locked Rotor Torque		%	385	148	141	127	119
Start Current		A	28.8	30.8	48.3	75.2	106.3
No.starts per hour			10	10	10	10	10
Voltage Tolerance			±10%	±10%	±10%	±10%	±10%
Frequency Tolerance			±5%	±5%	±5%	±5%	±5%

Name-Plate Rating	Output	kW	11	15	18.5	22	30	37	45
	Phase		3	3	3	3	3	3	3
	Pole		4	4	4	4	4	4	4
	Voltage	V	400	400	400	400	400	400	400
	Current	A	22.3	30.1	35.6	42.6	60.4	72.5	87.6
	Frequency	Hz	50	50	50	50	50	50	50
	Insulation Class		H	H	H	H	H	H	H
Speed		min^{-1}	1465	1470	1470	1470	1470	1475	1475
Locked Rotor Torque		%	182	206	152	154	209	161	169
Start Current		A	151.0	237.2	252.8	312.2	458.5	526.1	670.2
No.starts per hour			6	6	6	6	6	6	6
Voltage Tolerance			±10%	±10%	±10%	±10%	±10%	±10%	±10%
Frequency Tolerance			±5%	±5%	±5%	±5%	±5%	±5%	±5%

Motor Data for Model DKE 50Hz

■ Applicable Model - ZDKEEU3 50Hz 415V

Applicable Motor Model	Phase	Poles	Voltage	Hz	Service Factor	VFD
ZDKEEU3	3	4	415 V	50	1.0	Available

Name-Plate Rating	Output	kW	1.5	2.2	3.7	5.5	7.5
	Phase		3	3	3	3	3
	Pole		4	4	4	4	4
	Voltage	V	415	415	415	415	415
	Current	A	3.4	5.0	8.1	11.4	15.8
	Frequency	Hz	50	50	50	50	50
	Insulation Class		H	H	H	H	H
Speed		min^{-1}	1445	1455	1450	1460	1465
Locked Rotor Torque		%	418	159	152	137	129
Start Current		A	30.0	32.2	50.5	78.7	111.4
No.starts per hour			10	10	10	10	10
Voltage Tolerance			±10%	±10%	±10%	±10%	±10%
Frequency Tolerance			±5%	±5%	±5%	±5%	±5%

Name-Plate Rating	Output	kW	11	15	18.5	22	30	37	45
	Phase		3	3	3	3	3	3	3
	Pole		4	4	4	4	4	4	4
	Voltage	V	415	415	415	415	415	415	415
	Current	A	22.2	30.3	35.6	42.6	60.1	72.2	87.0
	Frequency	Hz	50	50	50	50	50	50	50
	Insulation Class		H	H	H	H	H	H	H
Speed		min^{-1}	1465	1475	1470	1475	1475	1475	1475
Locked Rotor Torque		%	197	222	159	166	227	173	182
Start Current		A	158.2	247.6	263.8	325.2	479.2	548.5	698.4
No.starts per hour			6	6	6	6	6	6	6
Voltage Tolerance			±10%	±10%	±10%	±10%	±10%	±10%	±10%
Frequency Tolerance			±5%	±5%	±5%	±5%	±5%	±5%	±5%