ANDO TECHNIK
Tel.: 040/8224565-0
www.ando-technik.com

EBARA

SPECIFICATION: DS (Sump Pump)

ANDO TECHNIK
Tel.: 040/8224565-0
www.ando-technik.com

50 Hz

Rev. E

DS				
PUMP	Liquid Handled	Type of liquid		Dirty water
		Max Temp.	[°C]	40°
		Max solids size	[mm]	5 (50DS) 6 (65DS) 7 (80DS) 8 (100DS)
		Max fibers length	[mm]	50
	Submergence	Max	[m]	3 (1.5 kW) 7 (2.2÷7.5 kW)
		Min	[m]	Refer to low water level (L.W.L.) and usage restriction in dimension
	Construction	Impeller		Semi - open (with strainer)
		Shaft seal type		Oil lubricated, single spring double mechanical seal
	Connection	Suction		Strainer
		Discharge	[inch] [mm]	G1½ UNI ISO 228 (50DS 1.5 kW) DN 50, 65, 80, 100 PN 10 according to EN 1092-2
	Materials	Casing		Cast iron
		Impeller		Cast iron
		Suction Cover		Stainless Steel (1.5 kW) Cast iron (2.2÷7.5 kW)
		Shaft		Aisi 403
		Motor frame		Cast iron
		Fasteners		Aisi 304
		Mechanical seal		SiC/SiC/NBR Impeller side Carbon/Ceramic/NBR Motor side Lubricant: Turbine Oil VG32 (SAE 10W/20W)
	Accessories	Standard		Screwed flange oval type (1.5 kW). Discharge elbow (2.2÷7.5 kW).
		Optional		Quick Discharge Connector (QDC): LS, LM, LL type
	Applicable standard of test			ISO 9906 Annex A
MOTOR	Type			Three Phase air filled dry submersible
	No. of Poles			2
	Rotation speed		[min^{-1}]	~ 2850
	Insulation Class			F
	Protection degree			IP 68
	Power Rating		[kW]	1.5 ÷ 7.5
	Frequency		[Hz]	50 ±1%
	Voltage		[V]	380-415 ±10%
	Starting			DOL
	Over load protection			Built in
	Cable	material		H07RN-F
		length	[m]	6 (up to 1.5 kW), 10 (2.2 kW and above)
	Bearings			Permanently lubricated sealed ball bearings

SPECIFICATION: DVS (Semi-Vortex Pump)

ANDO TECHNIK
Tel.: 040/8224565-0
www.ando-technik.com

50 Hz

Rev. E

DVS				
PUMP	Liquid Handled	Type of liquid		Water containing foreign matter
		Max Temp.	[°C]	40°
		Max solids size	[mm]	21 (50DVS) 33 (65DVS & 80DVS 1.5 kW) 41 (65DVS & 80DVS 2.2 - 3.7 kW)
		Max fibers length	[mm]	100 (50DVS) 200 (65DVS & 80DVS 1.5 kW) 245 (65DVS & 80DVS 2.2 - 3.7 kW)
	Submergence	Max	[m]	3 (1.5 kW) 7 (2.2 ÷ 3.7 kW)
		Min	[m]	Refer to low water level (L.W.L.) and usage restriction in dimension
	Construction	Impeller		Semi – Vortex
		Shaft seal type		Oil lubricated, single spring double mechanical seal
	Connection	Suction		Open
		Discharge	[inch] [mm]	G1½ UNI ISO 228 (50DVS 1.5 kW) DN 50, 65, 80 PN 10 according to EN 1092-2
	Materials	Casing		Cast iron
		Impeller		Cast iron
		Shaft		Aisi 403
		Motor frame		Cast iron
		Fasteners		Aisi 304
		Mechanical seal		SiC/SiC/NBR Impeller side Carbon/Ceramic/NBR Motor side Lubricant: Turbine Oil VG32 (SAE 10W/20W)
	Accessories	Standard		Screwed companion oval flange (50 DVS) Discharge elbow (65DVS & 80DVS)
		Optional		Quick Discharge Connector (QDC): LS, LM, type
	Applicable standard of test			ISO 9906 Annex A
MOTOR	Type			Three Phase air filled dry submersible
	No. of Poles			2
	Rotation speed		[min^{-1}]	~ 2850
	Insulation Class			F
	Protection degree			IP 68
	Power Rating		[kW]	1.5 ÷ 3.7
	Frequency		[Hz]	50±1%
	Voltage		[V]	380-415 ±10%
	Starting			DOL
	Over load protection			Built in
	Cable	material		H07RN-F
		length	[m]	6 (up to 1.5 kW), 10 (2.2 kW and above)
	Bearings			Permanently lubricated sealed ball bearings

SELECTION CHART

ANDO TECHNIK
Tel.: 040/8224565-0
www.ando-technik.com

50 Hz

Rev. E

DS-DSF

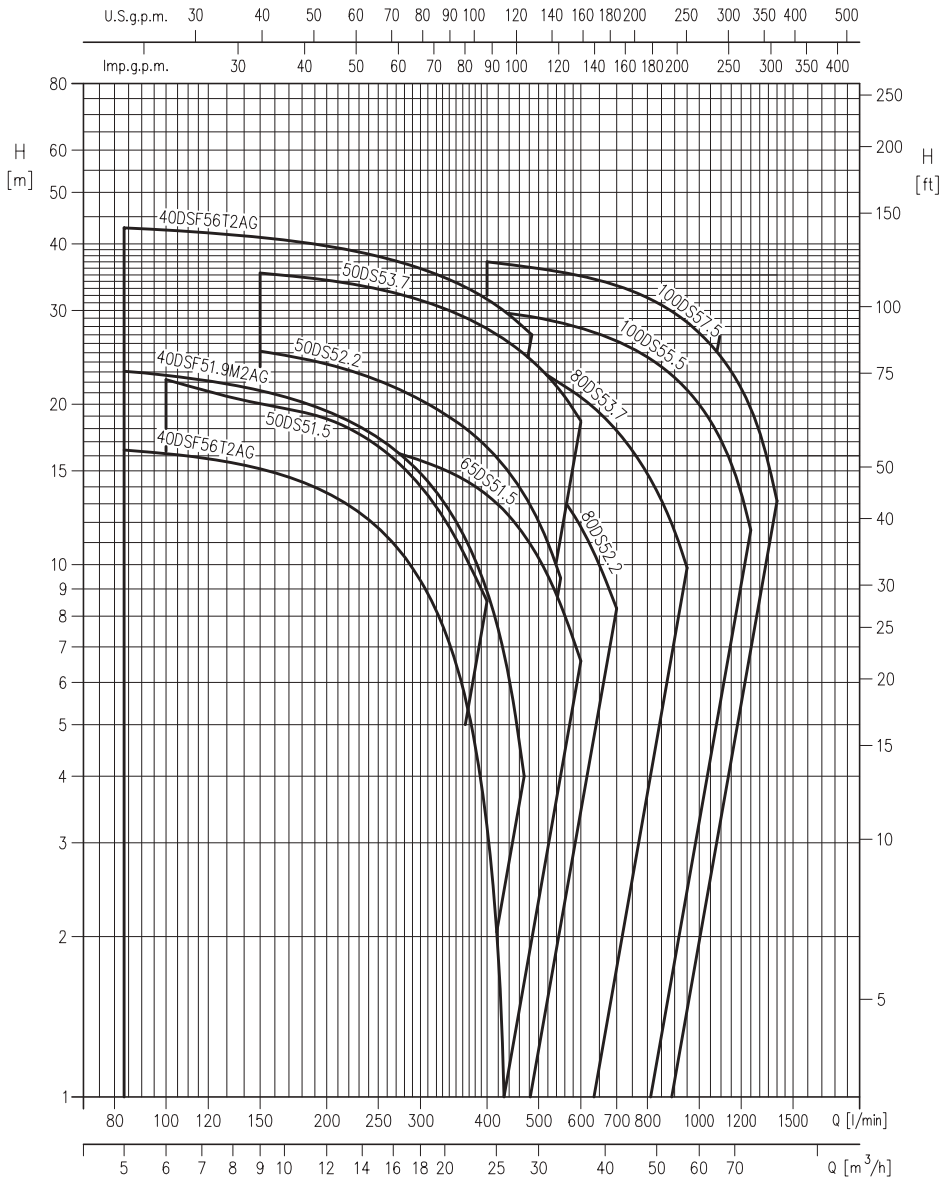

Pump Type	Power [kW]	Power [HP]	Q=Capacity l/min	0	83	100	150	200	250	300	400	433	450	467	473	483	500	550	580	600	700	800	950	1000	1170	1200	1250	1400
			m³/h	0	5	6	9	12	15	18	24	26	27	28	28.4	29	30	33	34.8	36	42	48	57	60	70.2	72	75	84
			H=Total manometric head in meters																									
40DSF51.5M2CG	1.5	2		16.9	16.4	16.2	15.1	13.6	11.7	9.3	3.2	0.8	-	-	-	-	-	-	-	-	-	-	-	-	-	-	-	-
40DSF51.9M2AG	1.9	2.5		24.6	23.1	22.7	21.2	19.4	17.3	14.8	8.9	6.6	5.4	4.2	-	-	-	-	-	-	-	-	-	-	-	-	-	-
40DSF56T2AG	6	8		45	43	42.5	41	39.6	37.9	36	31.5	30	28.9	28	27.7	27.1	-	-	-	-	-	-	-	-	-	-	-	-
50DS51.5	1.5	2		24	-	22.3	20.7	18.8	16.5	14	8.5	-	-	-	-	-	-	-	-	-	-	-	-	-	-	-	-	-
50DS52.2	2.2	3		27	-	-	25.2	23.7	22.1	20.4	16.6	15.2	14.4	13.6	13.3	12.9	12	9.4	-	-	-	-	-	-	-	-	-	-
50DS53.7	3.7	5		37.4	-	-	35.3	34.2	32.9	31.4	27.7	26.4	25.7	25.0	24.6	24.2	23.5	21.1	19.5	18.6	-	-	-	-	-	-	-	-
65DS51.5	1.5	2		18	-	-	17.5	17.1	16.5	15.7	13.5	12.5	12	11	11.2	10.9	10.3	8.5	7.3	6.6	-	-	-	-	-	-	-	-
80DS52.2	2.2	3		22	-	-	-	20.8	20.2	19.4	17.6	16.8	16.4	15.9	15.8	15.5	15	13.4	12.5	11.8	8.3	-	-	-	-	-	-	-
80DS53.7	3.7	5		27.5	-	-	-	-	26.3	25.8	24.6	24.0	23.7	23.5	23.3	23.1	22.8	21.8	21.2	20.6	17.8	14.8	9.9	-	-	-	-	-
100DS55.5	5.5	7.5		31.6	-	-	-	-	-	30.7	30	30	29.5	29.4	29.3	29.2	29	28.4	28	27.8	26.3	24.5	21.3	20.0	14.8	13.6	11.6	-
100DS57.5	7.5	10		39.2	-	-	-	-	-	-	37	37	36.6	36.4	36.3	36.2	36	35.5	35.1	34.8	33.4	31.7	28.5	27.3	22.5	21.4	19.7	13.2

SELECTION CHART

ANDO TECHNIK
Tel.: 040/8224565-0
www.ando-technik.com

50 Hz

Rev. E

DVS

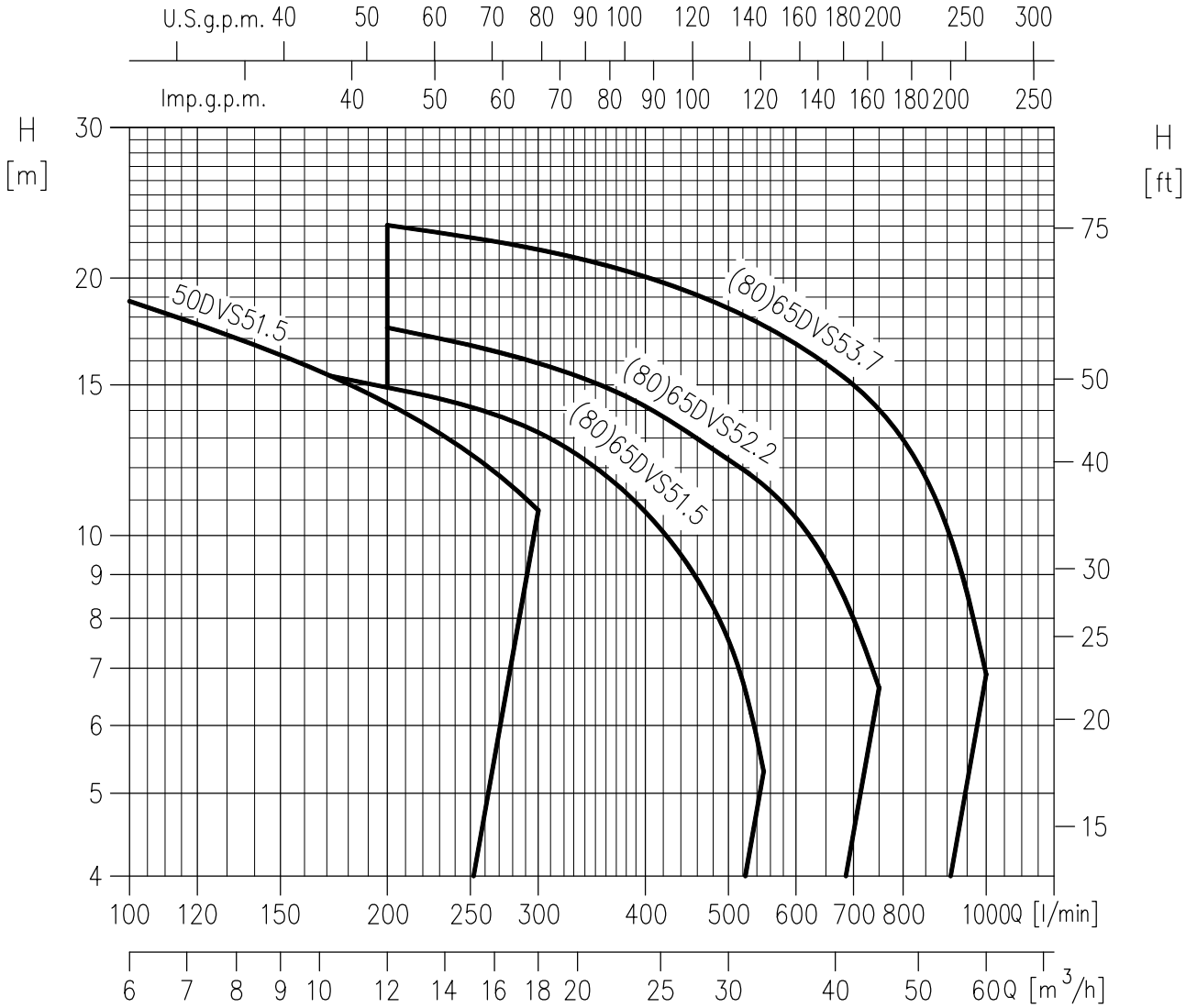

Pump Type	Power		Q=Capacity												
			l/min 0	100	150	200	300	400	500	550	600	700	750	900	1000
	[kW]	[HP]	m³/h 0	6	9	12	18	24	30	33	36	42	45	54	60
			H=Total manometric head in meters												
50DVS51.5	1.5	2	22.0	18.8	16.6	14.3	10.7	-	-	-	-	-	-	-	-
(80)65DVS51.5	1.5	2	18.6	-	15.8	14.9	13.2	10.9	7.6	5.3	-	-	-	-	-
(80)65DVS52.2	2.2	3	20.3	-	-	17.5	15.9	14.2	12.3	11.5	10.5	8.1	6.6	-	-
(80)65DVS53.7	3.7	5	25.7	-	-	23.0	21.6	20.1	18.4	17.6	16.7	15.0	14.0	10.4	6.9

PERFORMANCE CURVE

ANDO TECHNIK
Tel.: 040/8224565-0
www.ando-technik.com

50 Hz

Rev. E

TYPE KEY
PUMP

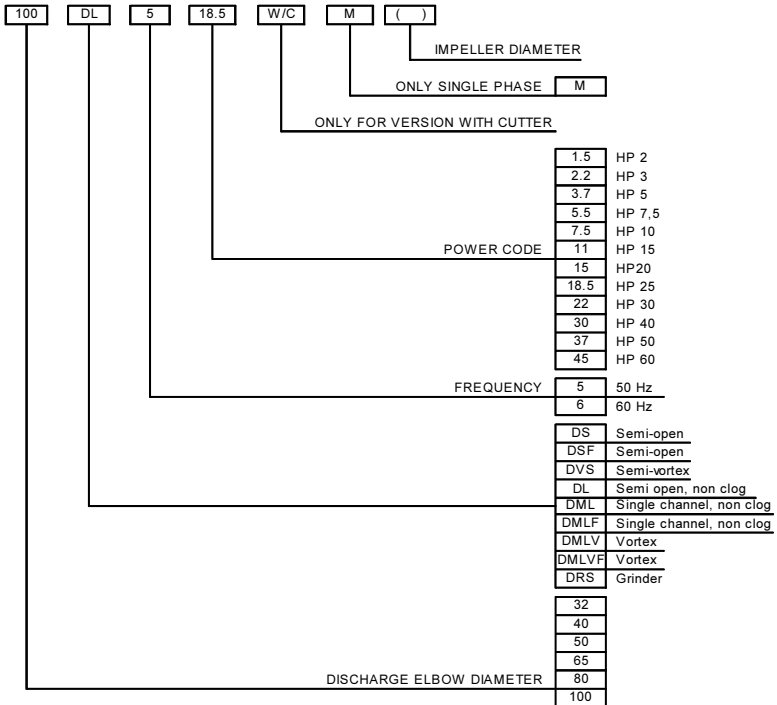

QDC (QUICK DISCHARGE CONNECTOR)

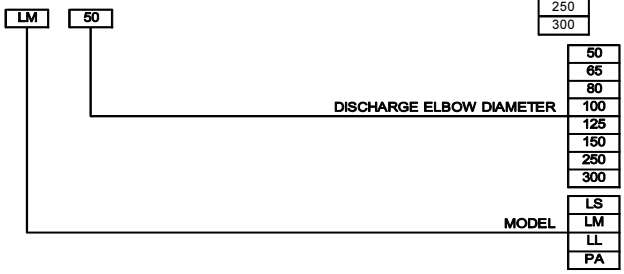

PERFORMANCE CURVE SPECIFICATIONS

The specifications below qualify the curves shown on the following pages.

Tolerances according to ISO 9906 Annex A
The curves refer to effective speed of asynchronous motors at 50 Hz
Measurements were carried out with clean water at 20°C of temperature and with a kinematic viscosity of ν = 1 mm^2/s (1 cSt)
The continuous curves indicate the recommended working range. The dotted curve is only a guide.
In order to avoid the risk of over-heating, the pumps should not be used at a flow rate below 10% of best efficiency point.

Symbols explanation:

Q = volume flow rate
H = total head
P_2 = pump power input (shaft power)
η = pump efficiency

PERFORMANCE CURVE

ANDO TECHNIK
Tel.: 040/8224565-0
www.ando-technik.com

50 Hz

Rev. E

50DS51.5 (1.5 kW)
50DS52.2 (2.2 kW)
50DS53.7 (3.7 kW)

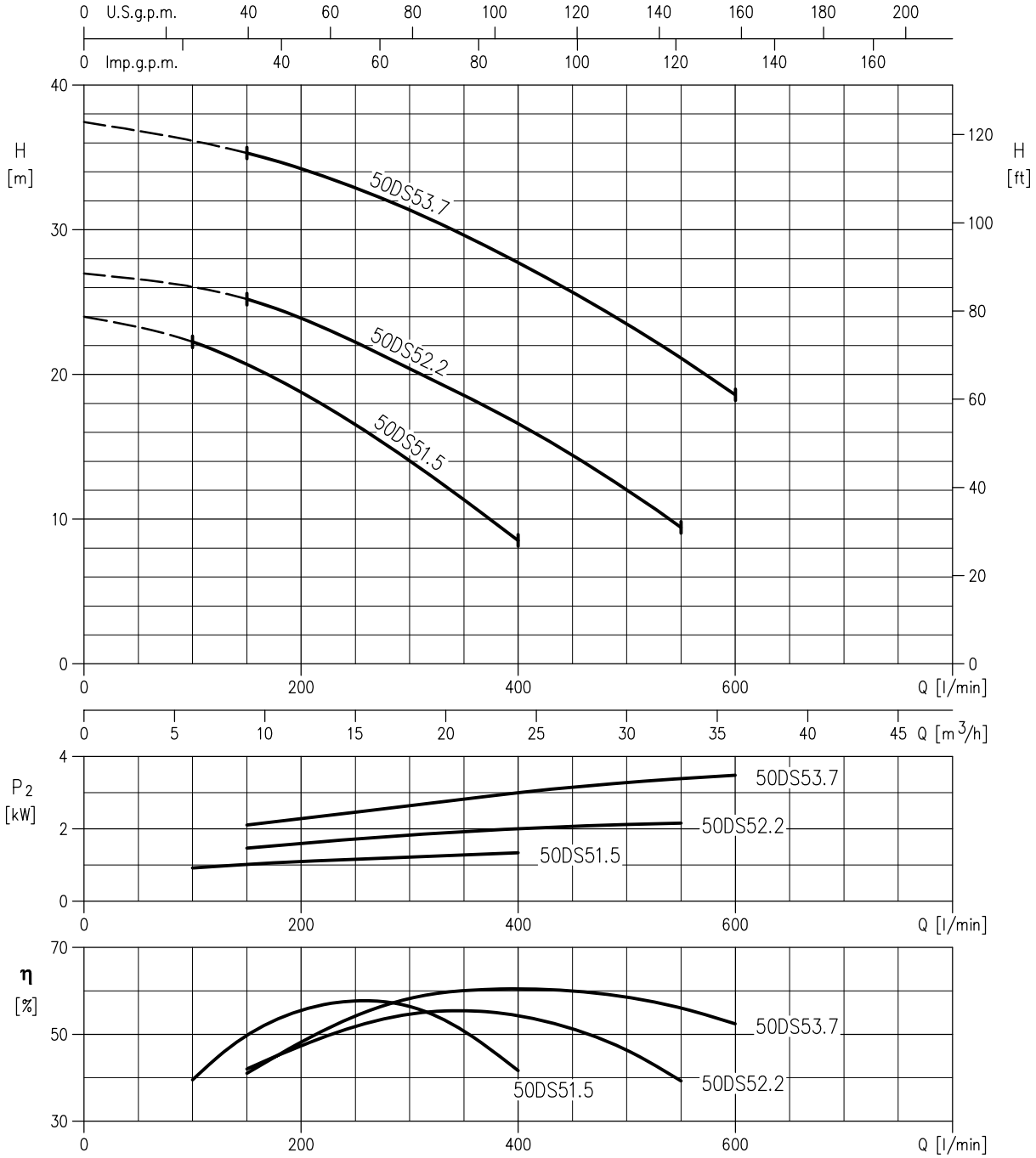

Rotation speed ≈ 2850 min^{-1}
Test standard: ISO 9906 – Annex A

PERFORMANCE CURVE

ANDO TECHNIK
Tel.: 040/8224565-0
www.ando-technik.com

50 Hz

Rev. E

65DS51.5 (1.5 kW)

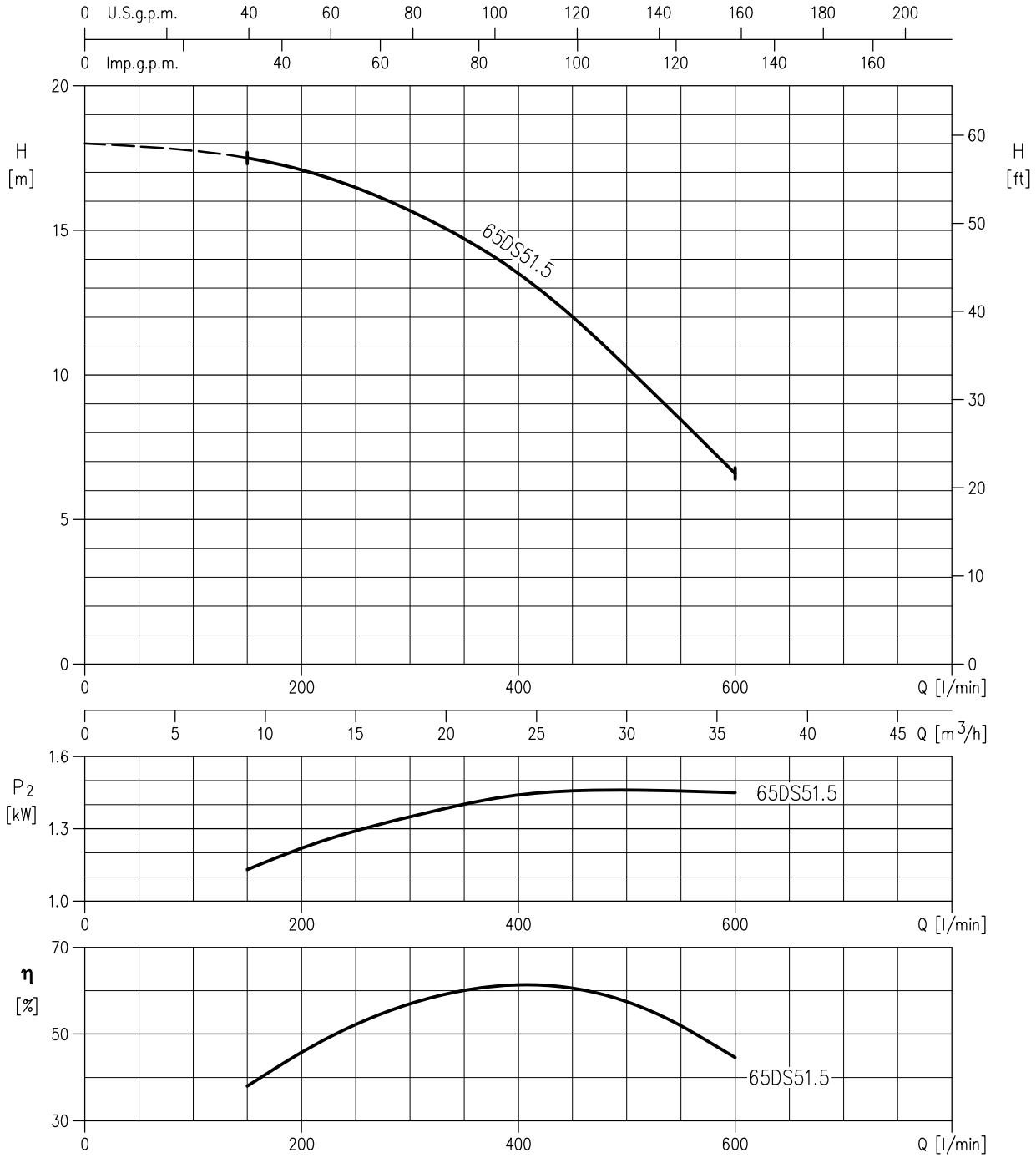

Rotation speed ≈ 2850 min^{-1}

Test standard: ISO 9906 – Annex A

PERFORMANCE CURVE

ANDO TECHNIK
Tel.: 040/8224565-0
www.ando-technik.com

50 Hz

Rev. E

80DS52.2 (2.2 kW)
80DS53.7 (3.7 kW)

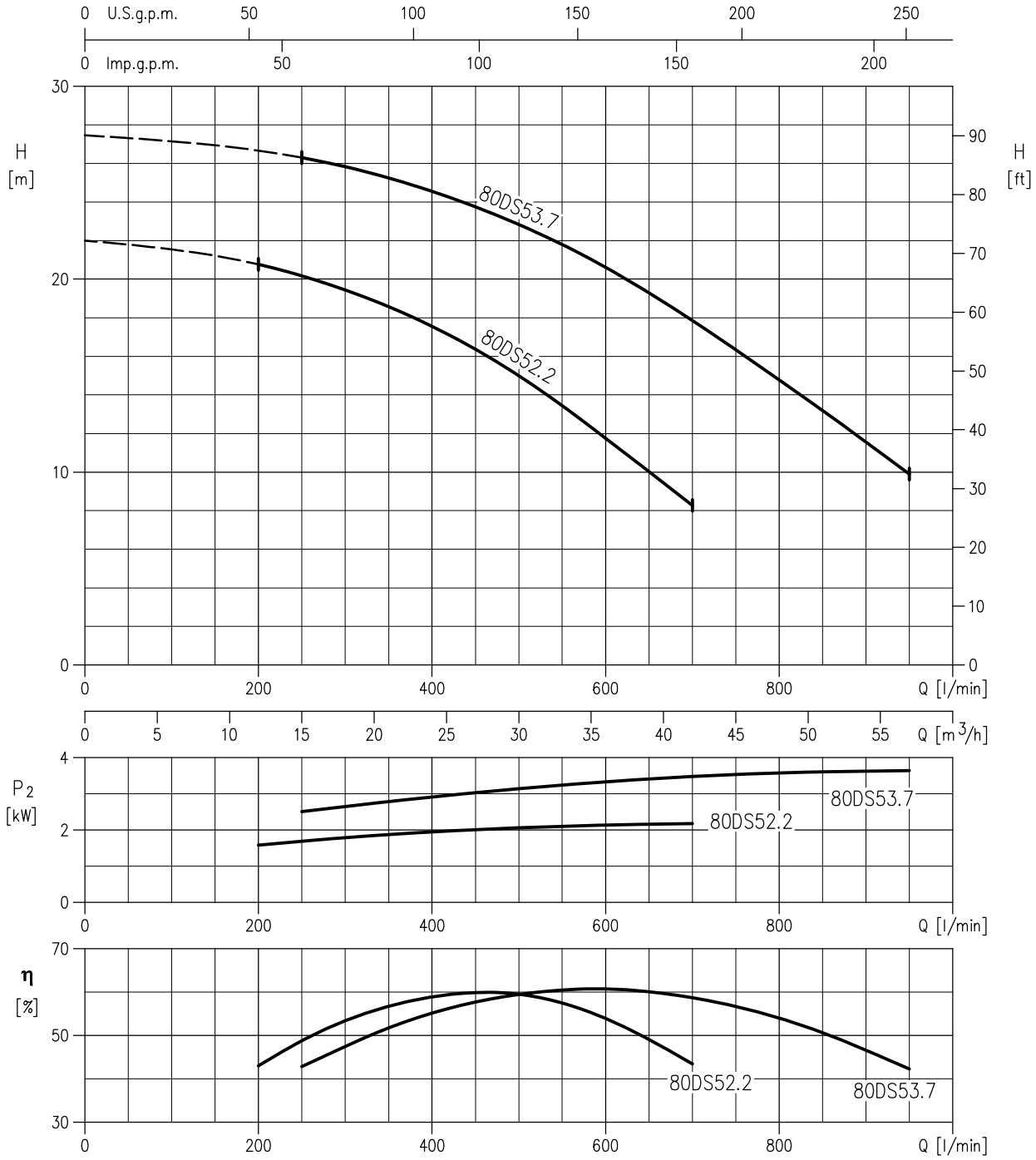

Rotation speed ≈ 2850 min^{-1}
Test standard: ISO 9906 – Annex A

PERFORMANCE CURVE

ANDO TECHNIK
Tel.: 040/8224565-0
www.ando-technik.com

50 Hz

Rev. E

100DS55.5 (5.5 kW)
100DS57.5 (7.5 kW)

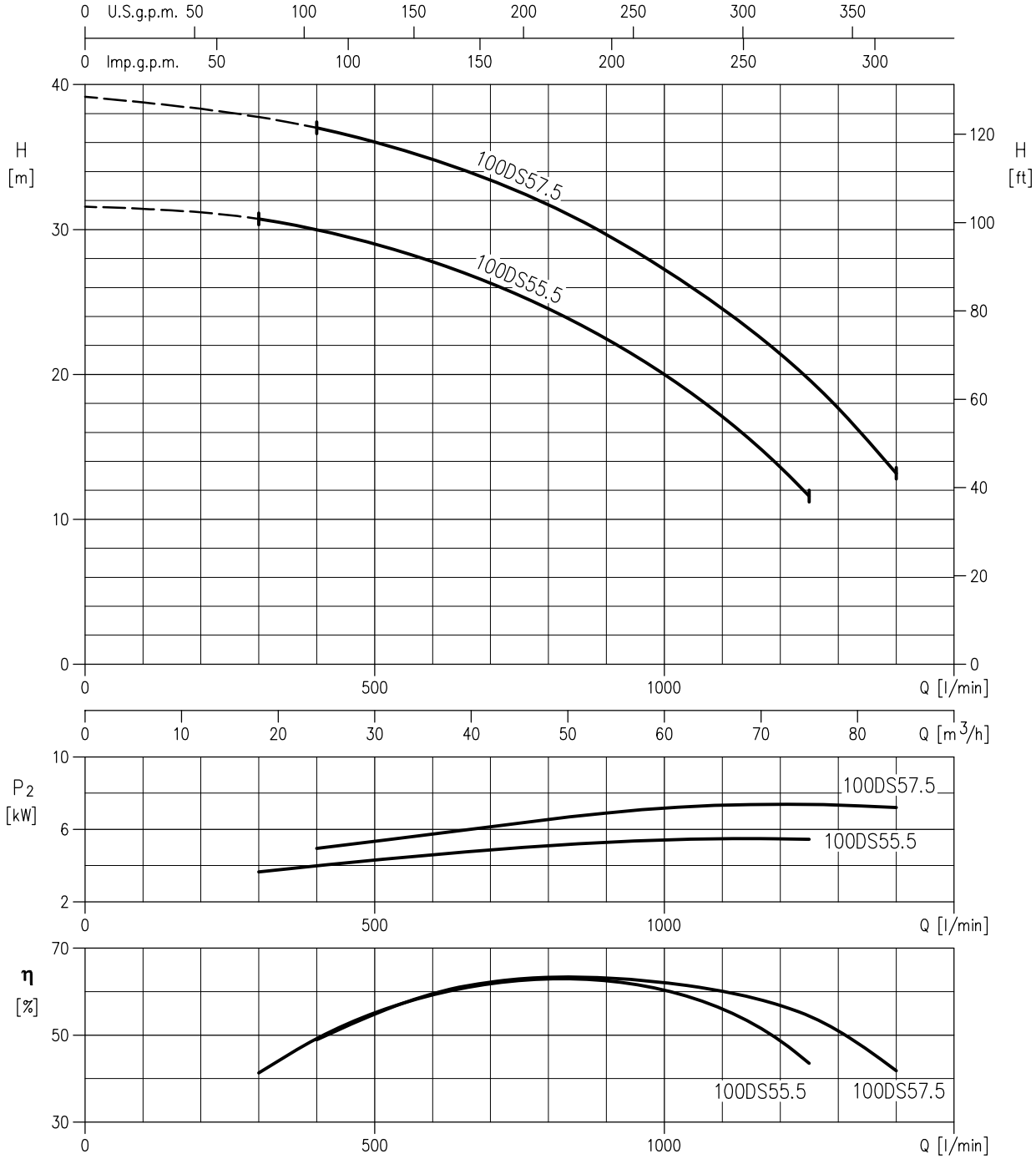

Rotation speed ≈ 2850 min^{-1}
Test standard: ISO 9906 – Annex A

PERFORMANCE CURVE

ANDO TECHNIK
Tel.: 040/8224565-0
www.ando-technik.com

50 Hz

Rev. E

50DVS51.5 (1.5 kW)

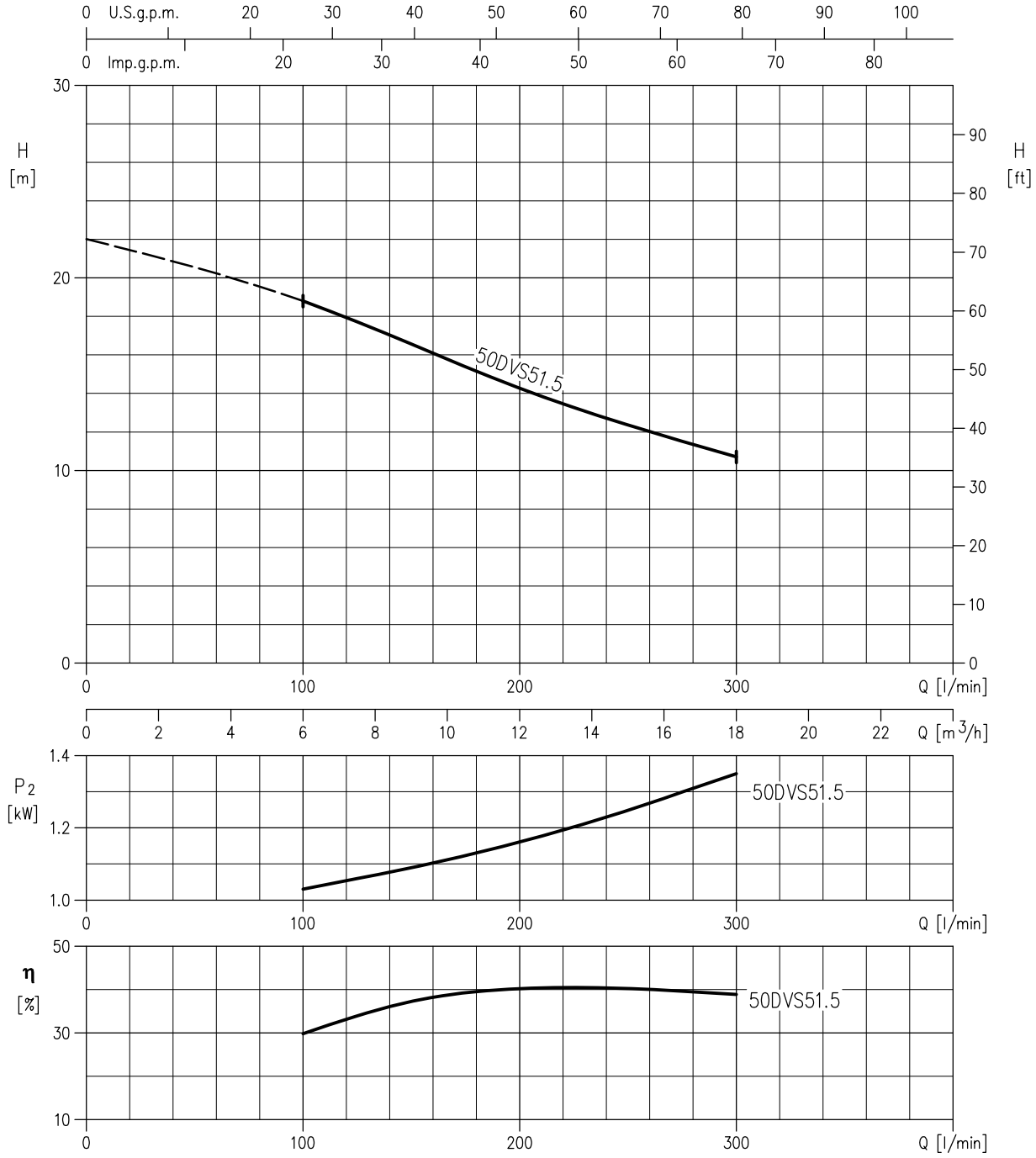

Rotation speed ≈ 2850 min^{-1}
Test standard: ISO 9906 – Annex A

PERFORMANCE CURVE

ANDO TECHNIK
Tel.: 040/8224565-0
www.ando-technik.com

50 Hz

Rev. E

(80)65DVS51.5 (1.5 kW)
(80)65DVS52.2 (2.2 kW)
(80)65DVS53.7 (3.7 kW)

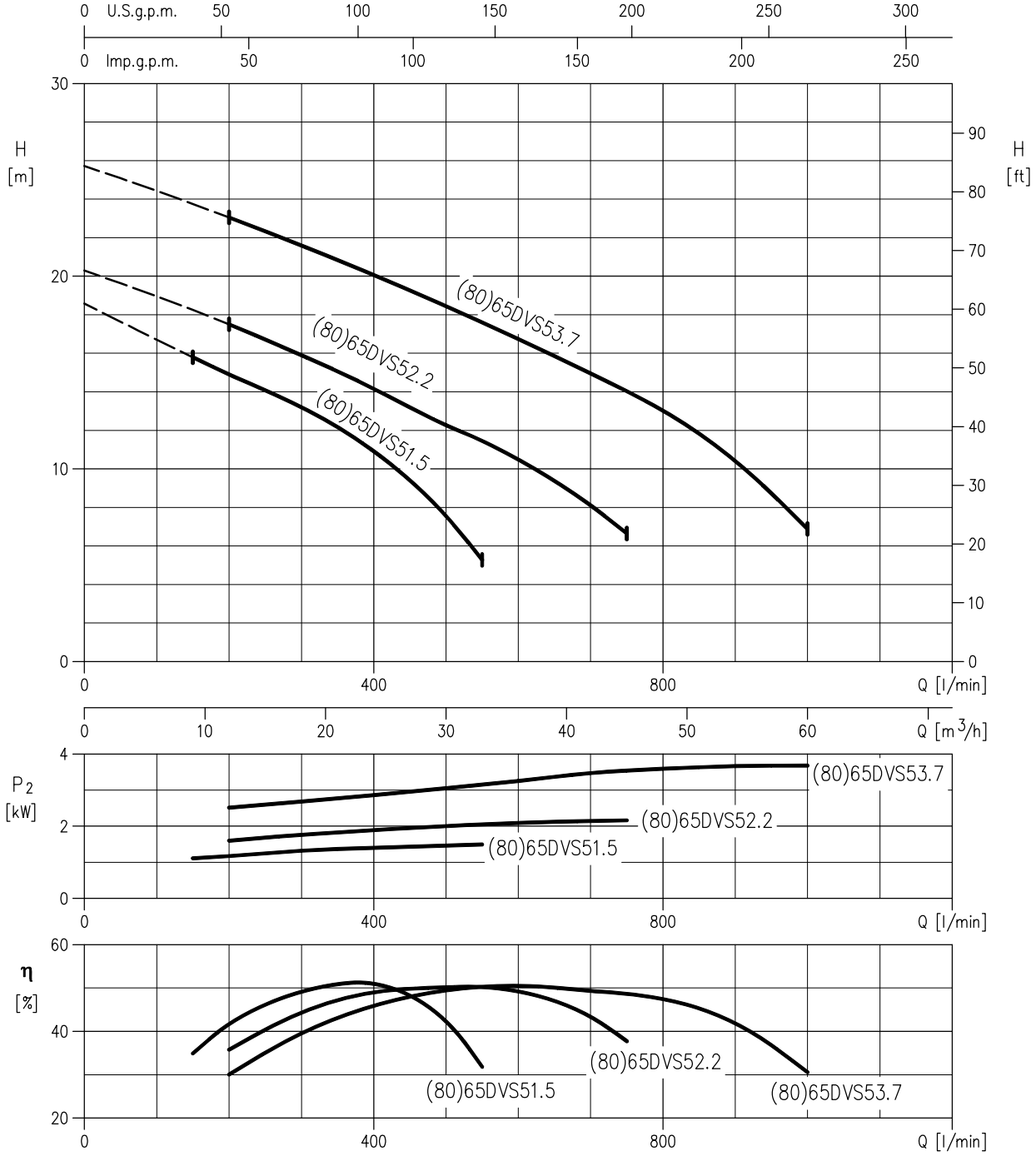

Rotation speed ≈ 2850 min^{-1}

Test standard: ISO 9906 – Annex A

DIMENSIONS AND WEIGHT

ANDO TECHNIK
Tel.: 040/8224565-0
www.ando-technik.com

50 Hz

Rev. E

50DS

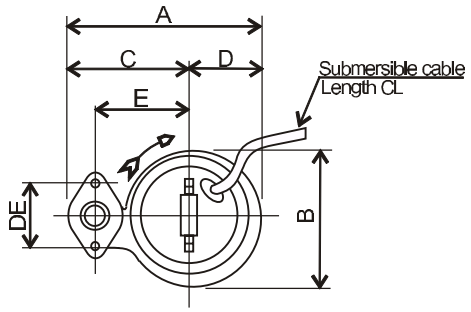

Figure 1

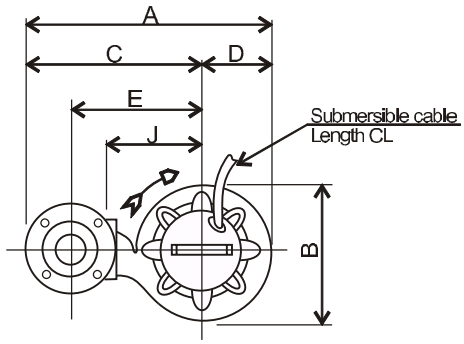

Figure 2

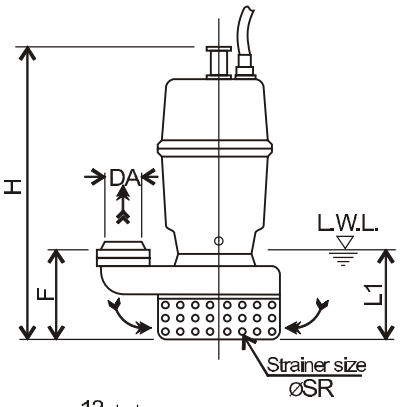

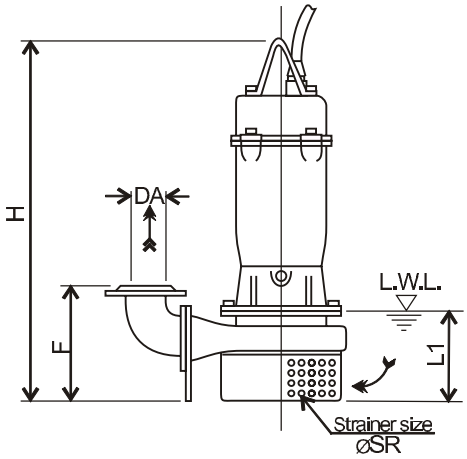

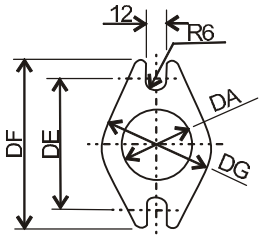

Oval Flange

Discharge flange dimensions [mm] - EN 1092-2							
Type	DA	DE	DF	DG	DT	DN	DD
Oval	50	96	114	76	-	-	-
Round		125	165	99	17	4	19
	65	145	185	118			
	80	160	200	132	19	8	
	100	180	220	156	21		

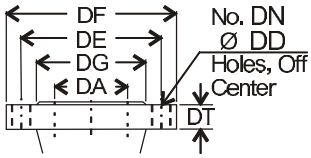

Round Flange

Dimensions [mm]																		
Size DA	Model	Fig.	Flange Type	Output [kW]	DA	A	B	C	D	E	F	H	DE	J	L1 (*)	ØSR	CL [m]	Weight [kg]
50	50DS51.5	1	Oval	1.5	G2"	266	200	168	98	130	115	450	96	-	120	10	6	25
	50DS52.2	2	Round	2.2	50	433	245	313	120	235	198	619	-	180	160		10	55
	50DS53.7			3.7														61
65	65DS51.5			1.5	65	407	210	303	104	215	197	503	-	150	120		6	35
80	80DS52.2			2.2	80	503	268	368	135	275	215	625	-	200	160		10	59
	80DS53.7			3.7														64
100	100DS55.5			5.5	100	615	309	460	155	355	257	730	-	250	200	13		92
	100DS57.5			7.5														104

(*)
- L.W.L (Low Water Level)
- Operation is limited to 10 minutes at L.W.L.
- Operation is limited to 30 minutes with water level below top of motor

DIMENSIONS AND WEIGHT

ANDO TECHNIK
Tel.: 040/8224565-0
www.ando-technik.com

50 Hz

Rev. E

DS with QDC (1.5÷3.7 kW)

Figure 1

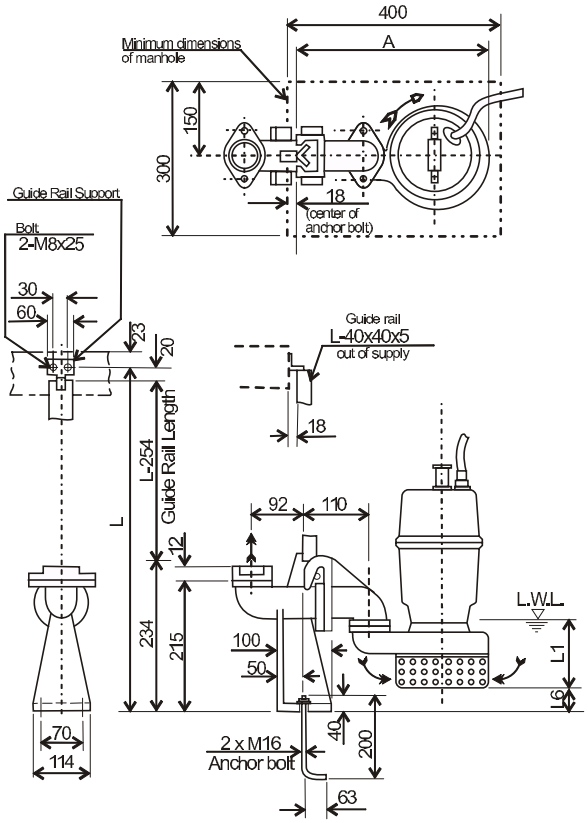

Figure 2

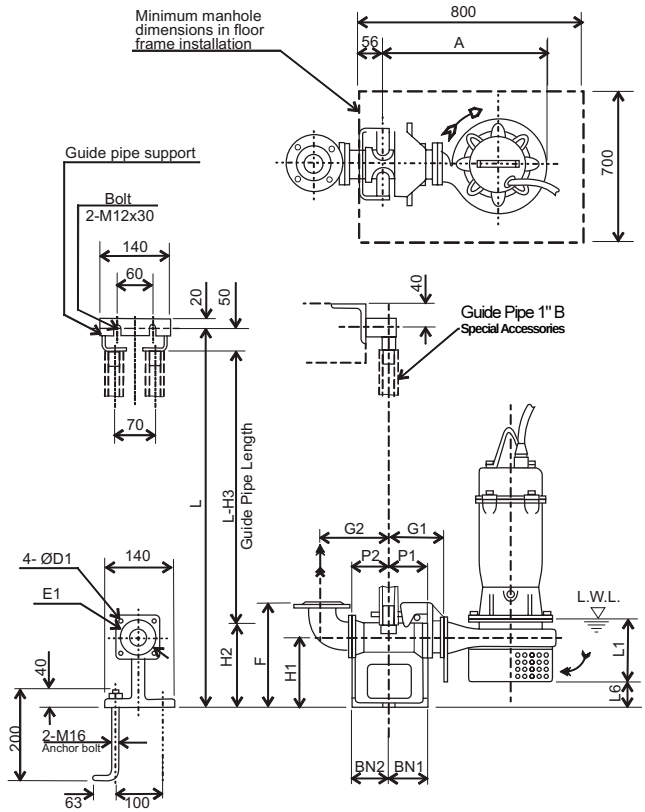

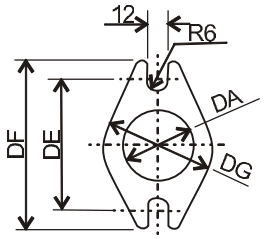

Oval Flange

Discharge flange dimensions [mm] - EN 1092-2							
Type	DA	DE	DF	DG	DT	DN	DD
Oval	50	96	114	76	-	-	-
Round		125	165	99	17	4	19
	65	145	185	118			
	80	160	200	132	19	8	

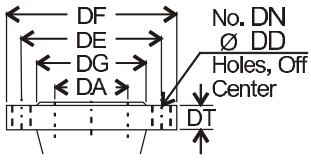

Round Flange

Dimensions [mm]																					
Size DA	Model	Fig.	Flange Type	Output [kW]	DA	A	P1	P2	G1	G2	F	H1	H2	H3	L1 (*)	L6	BN1	BN2	D1	E1	QDC Model	QDC Weight [kg]
50	50DS51.5	1	Oval	1.5	G2"	-	-	-	-	-	-	-	-	-	120	25	-	-	-	-	LS50	9
	50DS52.2	2	Round	2.2	50	415	75	80	115	135	230	135	165	215	160	32	75	80	12	120	LM50	11
	50DS53.7			3.7																		
65	65DS51.5			1.5	65	374	75	95	120	160	250	145	190	240	120	53		95	12	140	LM65	14
80	80DS52.2			2.2	80	460	75	90	125	165	285	175	230	280	160	70		90	15	155	LM80	17
	80DS53.7			3.7																		

(*)
- L.W.L (Low Water Level)
- Operation is limited to 10 minutes at L.W.L.
- Operation is limited to 30 minutes with water level below top of motor

DIMENSIONS AND WEIGHT

ANDO TECHNIK
Tel.: 040/8224565-0
www.ando-technik.com

50 Hz

Rev. E

DS (5.5÷7.5 kW) with QDC

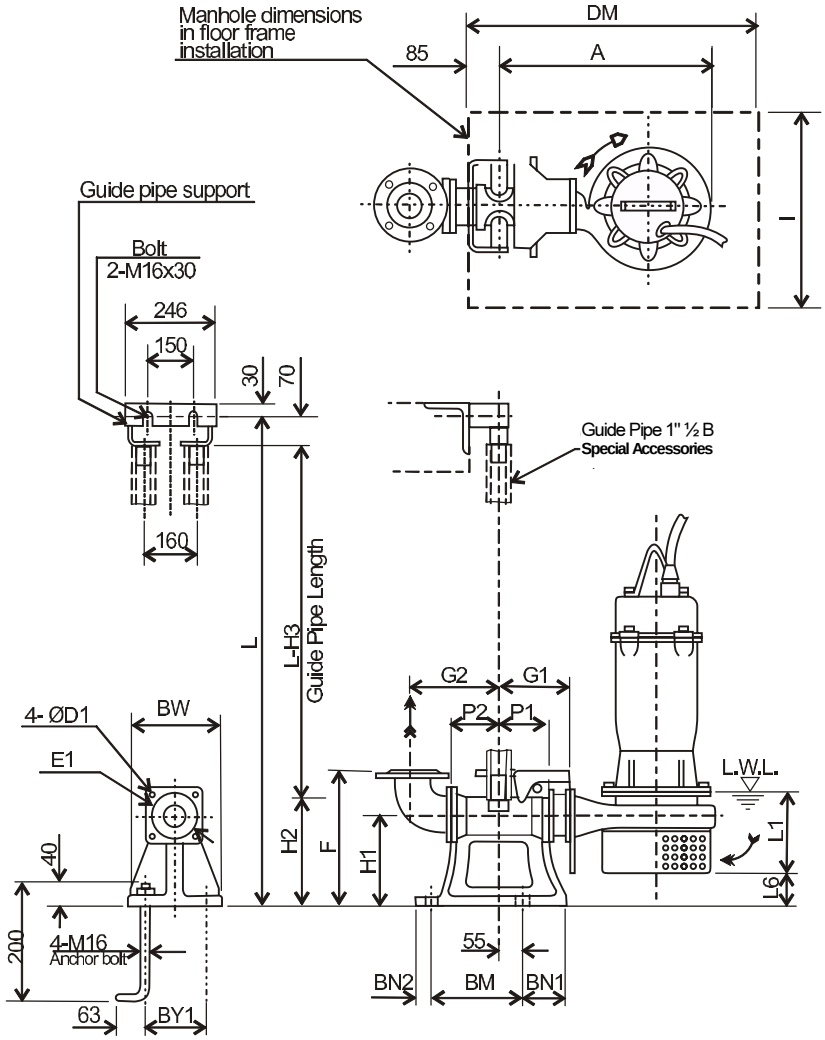

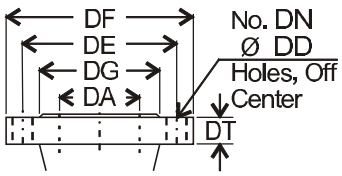

Discharge flange dimensions [mm] - EN 1092-2							
Type	DA	DE	DF	DG	DT	DN	DD
Round	100	180	220	156	21	8	19

Dimensions [mm]																							
Size DA	Model	Output [kW]	A	P1	P2	G1	G2	F	H1	H2	H3	L1 (*)	L6	BN1	BN2	BM	BY1	BW	DM	I	D1	E1	QDC Model	QDC Weight [kg]
100	100DS55.5	5.5	590	105	105	185	210	365	240	265	335	200	108	100	40	220	180	230	800	700	19	175	LL100	46
	100DS57.5	7.5																						

(*)
- L.W.L (Low Water Level)
- Operation is limited to 10 minutes at L.W.L.
- Operation is limited to 30 minutes with water level below top of motor

DIMENSIONS AND WEIGHT

ANDO TECHNIK
Tel.: 040/8224565-0
www.ando-technik.com

50 Hz

Rev. E

DVS

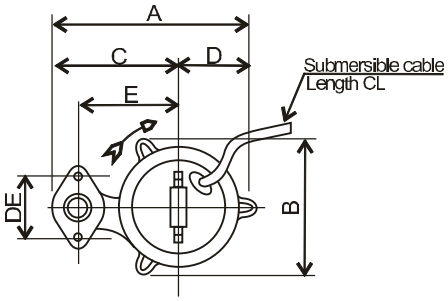

Figure 1

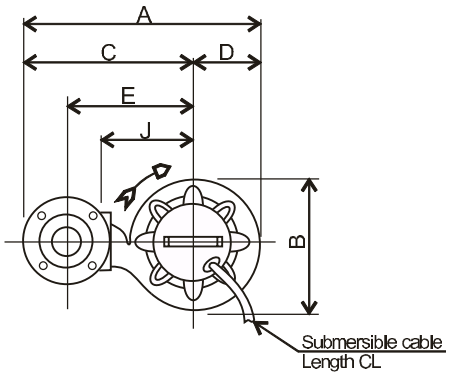

Figure 2

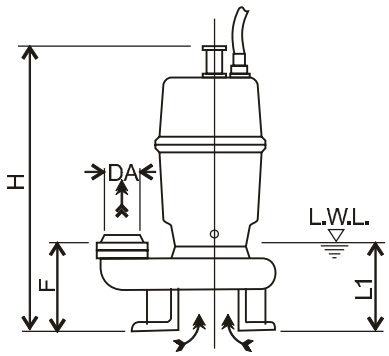

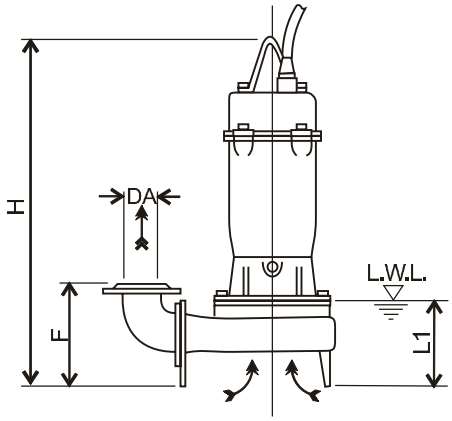

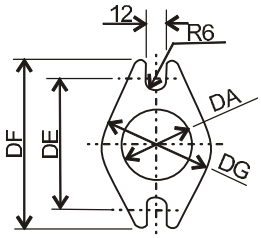

Oval Flange

Discharge flange dimensions [mm] - EN 1092-2							
Type	DA	DE	DF	DG	DT	DN	DD
Oval	50	96	114	76	-	-	-
Round	65	145	185	118	17	4	19
	80	160	200	132	19	8	

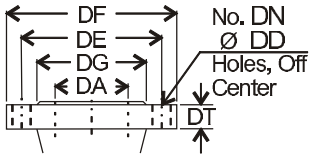

Round Flange

Dimensions [mm]																	
Size DA	Model	Fig.	Flange Type	Output [kW]	DA	A	B	C	D	E	F	H	DE	J	L1 (*)	CL [m]	Weight [kg]
50	50DVS51.5	1	Oval	1.5	G2"	249	171	163	86	125	82	439	96	-	105	6	27
65	65DVS51.5	2	Round	1.5	65	396	195	298	98	210	178	519	-	145	125		34
	65DVS52.2			2.2		427	227	313	114	225	201	643		160	155	10	50
	65DVS53.7			3.7													59
80	80DVS51.5			1.5	80	411	195		98	220	183	519		145	125	6	35
	80DVS52.2			2.2		442	227	328	114	235	206	643		160	155	10	51
	80DVS53.7			3.7													60

(*)
- L.W.L (Low Water Level)
- Operation is limited to 10 minutes at L.W.L.
- Operation is limited to 30 minutes with water level below top of motor

DIMENSIONS AND WEIGHT

ANDO TECHNIK
Tel.: 040/8224565-0
www.ando-technik.com

50 Hz

Rev. E

DVS with QDC

Figure 1

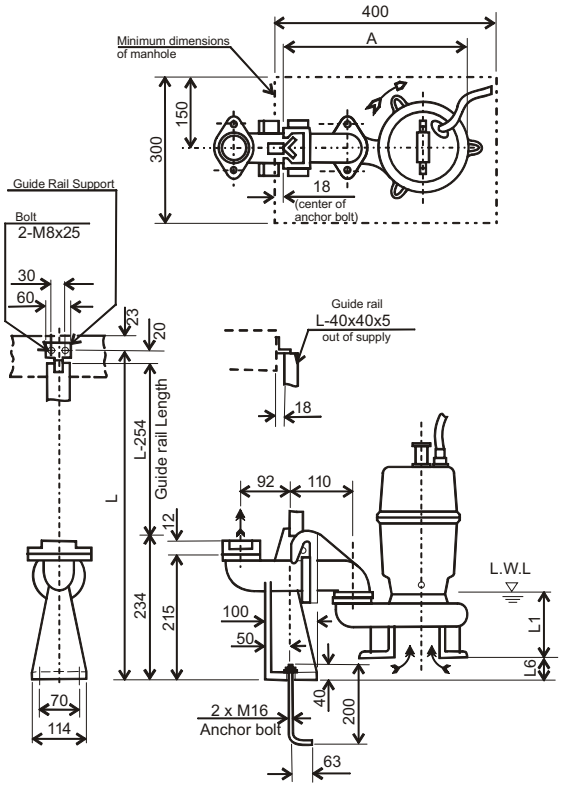

Figure 2

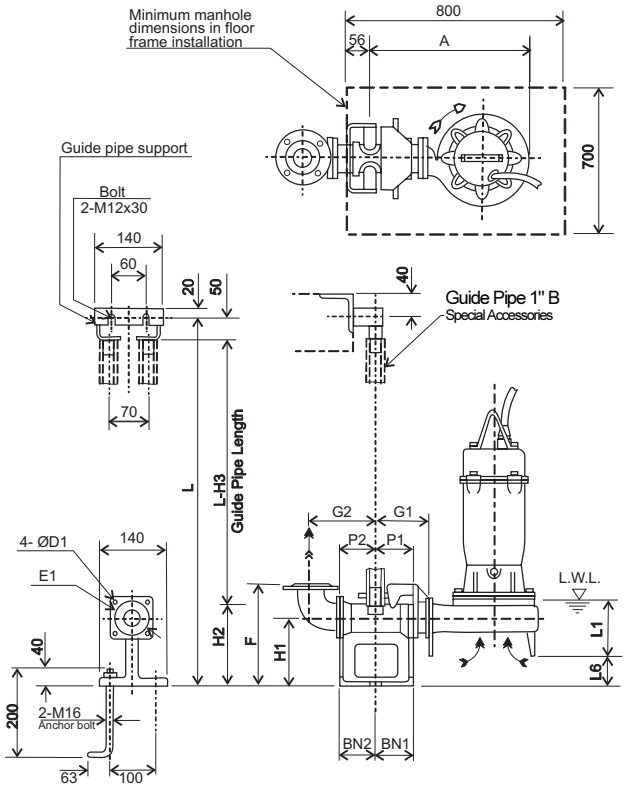

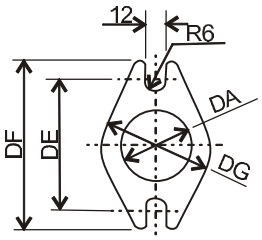

Oval Flange

Discharge flange dimensions [mm] - EN 1092-2							
Type	DA	DE	DF	DG	DT	DN	DD
Oval	50	96	114	76	-	-	-
Round	65	145	185	118	17	4	19
	80	160	200	132	19	8	

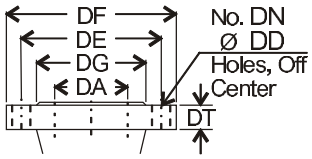

Round Flange

Dimensions [mm]																					
Size DA	Model	Fig.	Flange Type	Output [kW]	A	P1	P2	G1	G2	F	H1	H2	H3	L1 (*)	L6	BN1	BN2	D1	E1	QDC Model	QDC Weight [kg]
50	50DVS51.5	1	Oval	1.5	311	-	-	-	-	-	-	-	-	105	58	-	-	-	-	LS50	9
65	65DVS51.5	2	Round	1.5	363	75	95	120	160	250	145	190	240	125	72	75	95	12	140	LM65	14
	65DVS52.2			2.2	394									155	49						
	65DVS53.7			3.7																	
80	80DVS51.5			1.5	363				170	255	145			125	72						
	80DVS52.2			2.2	394									155	49						
	80DVS53.7			3.7																	

(*)
- L.W.L (Low Water Level)
- Operation is limited to 10 minutes at L.W.L.
- Operation is limited to 30 minutes with water level below top of motor

MOTOR DATA

ANDO TECHNIK
Tel.: 040/8224565-0
www.ando-technik.com

50 Hz

Rev. E

DS, DVS (1.5÷3.7 kW) MOTOR DATA

Output [P_2]			[kW]	1.5			2.2			3.7		
Resistance at 20° C			[Ω]	11.973			4.942			2.647		
GD²			[kg·m²]	0.0057			0.0082			0.011		
Voltage			[V]	380	400	415	380	400	415	380	400	415
Load	0%	Current	[A]	1.25	1.32	1.30	1.95	2.15	2.33	3.20	3.30	3.90
		Power	[W]	430	405	400	500	500	252	800	500	600
	75%	Current	[A]	2.92	2.62	2.61	4.07	4.06	3.82	7.07	6.32	6.45
		Efficiency	[%]	63.59	69.18	70.11	71.23	69.69	77.58	68.00	75.54	74.26
		Power factor	[%]	91.93	89.54	85.68	86.44	84.27	77.40	87.75	83.92	80.61
		Speed	[min^{-1}]	2872	2887	2898	2895	2901	2927	2890	2917	2922
	100%	Current	[A]	3.70	3.30	3.30	5.10	5.00	4.60	8.80	7.80	7.80
		Efficiency	[%]	65.61	71.25	70.89	73.05	72.28	79.33	70.79	77.64	76.74
		Power factor	[%]	93.88	92.08	89.21	89.71	87.87	83.88	90.24	88.18	86.00
		Speed	[min^{-1}]	2821	2847	2854	2851	2864	2900	2847	2886	2890
Locked Rotor Torque			[%]	243	295	303	161	186	184	175	216	233
Start Current			[A]	20.5	21.1	22.5	28.7	30.0	31.5	51.2	51.0	53.0
No. starts per hour				10								
Model				ZDSEU								

DS (5.5÷7.5 kW) MOTOR DATA

Output [P_2]			[kW]	5.5			7.5		
Resistance at 20° C			[Ω]	2.001			1.345		
GD²			[kg·m²]	0.03			0.037		
Voltage			[V]	380	400	415	380	400	415
Load	0%	Current	[A]	3.00	2.70	2.70	3.65	3.20	3.27
		Power	[W]	340	800	340	400	800	400
	75%	Current	[A]	8.37	8.36	7.59	11.43	11.02	10.17
		Efficiency	[%]	82.89	77.34	83.68	83.36	79.51	84.44
		Power factor	[%]	90.37	92.05	90.40	89.70	92.68	91.14
		Speed	[min^{-1}]	2944	2932	2945	2941	2928	2942
	100%	Current	[A]	10.80	10.80	9.80	14.80	14.30	13.20
		Efficiency	[%]	83.87	79.10	84.51	84.26	80.96	85.13
		Power factor	[%]	92.25	92.92	92.39	91.34	93.50	92.85
		Speed	[min^{-1}]	2922	2905	2923	2917	2900	2918
Locked Rotor Torque			[%]	168	155	168	159	154	159
Start Current			[A]	77.0	70.0	70.0	105.0	93.5	94.0
No. starts per hour				10					
Model				ZDSEU					